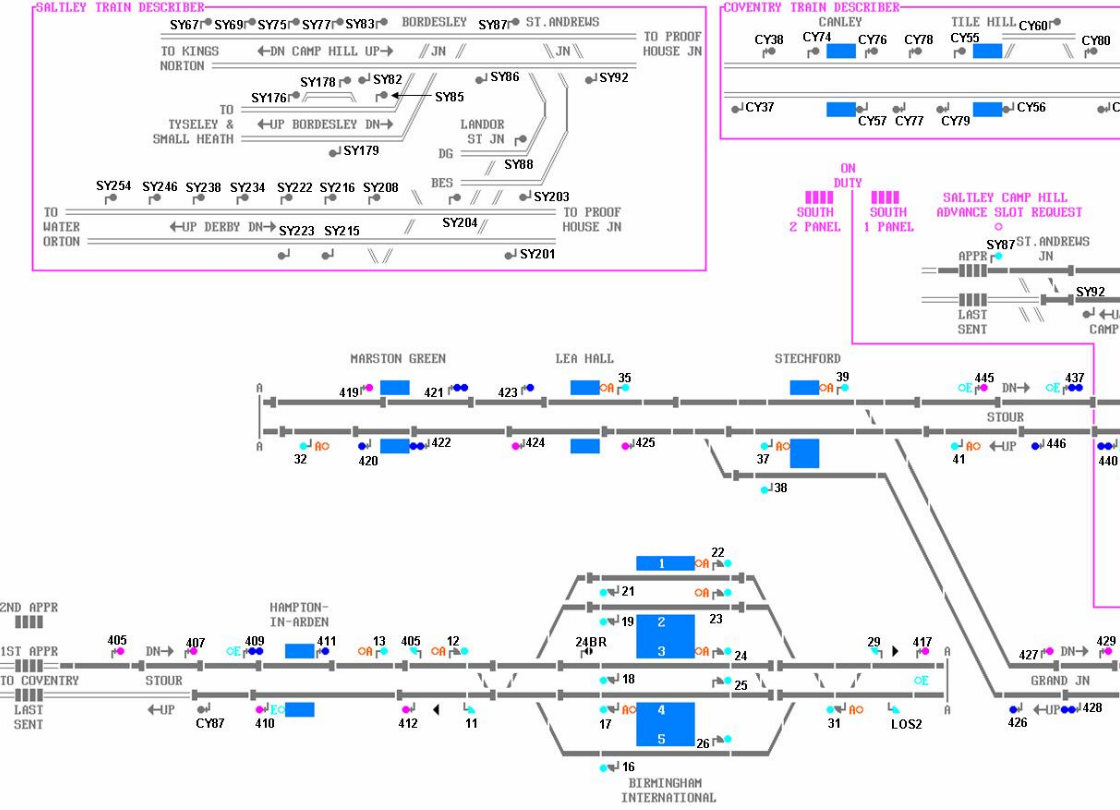
SALTLEY TRAIN DESCRIBER
SY67
SY69
SY75
SY77
SY83
BORDESLEY
SY87
ST.ANDREWS
TO PROOF HOUSE JN
TO KINGS NORTON
←DN CAMP HILL UP→
JN
JN
SY178
SY82
SY86
SY92
SY176
SY85
TO TYSELEY & SMALL HEATH
←UP BORDESLEY DN→
LANDOR ST JN
SY179
DG
SY88
BES
SY254
SY246
SY238
SY234
SY222
SY216
SY208
SY203
TO WATER ORTON
←UP DERBY DN→
SY223
SY215
SY204
TO PROOF HOUSE JN
SY201
COVENTRY TRAIN DESCRIBER
CANLEY
TILE HILL
CY60
CY38
CY74
CY76
CY78
CY55
CY80
CY37
CY57
CY77
CY79
CY56
C
ON DUTY
SOUTH 2 PANEL
SOUTH 1 PANEL
SALTLEY CAMP HILL ADVANCE SLOT REQUEST
SY87
ST.ANDREWS JN
APPR
SY92
LAST SENT
←U
CAMP
MARSTON GREEN
LEA HALL
STECHFORD
A
419
421
423
35
A
39
A
E
445
DN→
E
437
STOUR
A
32
A
420
422
424
425
37
A
38
41
A
←UP
446
440
2ND APPR
1ST APPR
HAMPTON-IN-ARDEN
405
DN→
407
E
409
411
13
A
405
12
A
1
22
A
21
A
19
2
23
24BR
3
A
24
29
417
A
427
DN→
429
TO COVENTRY
STOUR
18
25
E
GRAND JN
LAST SENT
←UP
CY87
410
E
412
11
17
A
4
5
26
31
A
LOS2
A
426
←UP
428
16
BIRMINGHAM INTERNATIONAL

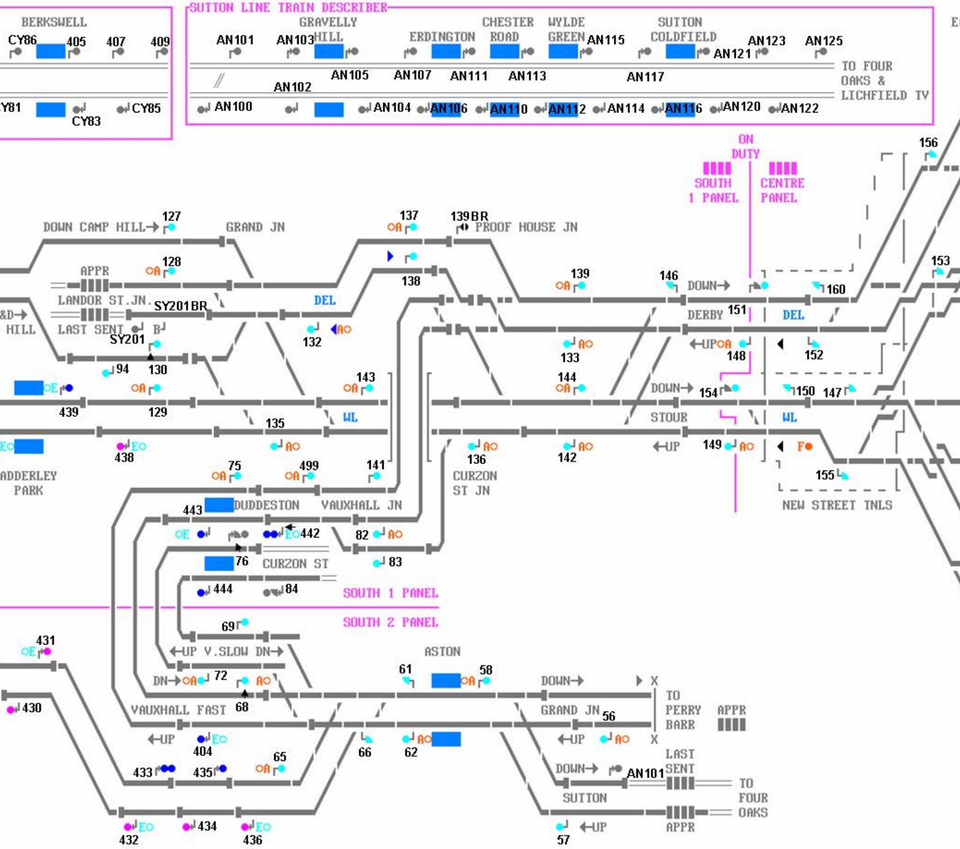
BERKSWELL
CY86
405
407
409
Y81
CY83
CY85
SUTTON LINE TRAIN DESCRIBER
GRAVELLY HILL
ERDINGTON
CHESTER ROAD
WYLDE GREEN
SUTTON COLDFIELD
AN101
AN103
AN115
AN123
AN125
AN121
AN105
AN107
AN111
AN113
AN117
AN102
AN100
AN104
AN106
AN110
AN112
AN114
AN116
AN120
AN122
TO FOUR OAKS & LICHFIELD TV
ON DUTY
SOUTH 1 PANEL
CENTRE PANEL
156
153
DOWN CAMP HILL→
127
GRAND JN
137
139BR
PROOF HOUSE JN
APPR
128
138
139
146
DOWN→
160
LANDOR ST.JN.
SY201BR
DEL
DERBY
151
DEL
&D→
HILL
LAST SENT
B
SY201
132
133
←UP
148
152
94
130
143
144
439
129
DOWN→
154
150
147
135
WL
STOUR
WL
438
136
142
←UP
149
ADDERLEY PARK
75
499
141
CURZON ST JN
155
NEW STREET TNLS
443
DUDDESTON
VAUXHALL JN
82
442
83
76
CURZON ST
444
84
SOUTH 1 PANEL
SOUTH 2 PANEL
69
431
←UP V.SLOW DN→
ASTON
61
58
DN→
72
DOWN→
X
68
TO PERRY BARR
APPR
VAUXHALL FAST
GRAND JN
56
430
←UP
404
66
62
←UP
X
65
LAST SENT
433
435
DOWN→
AN101
TO FOUR OAKS
SUTTON
APPR
432
434
436
57
←UP
A
E
F

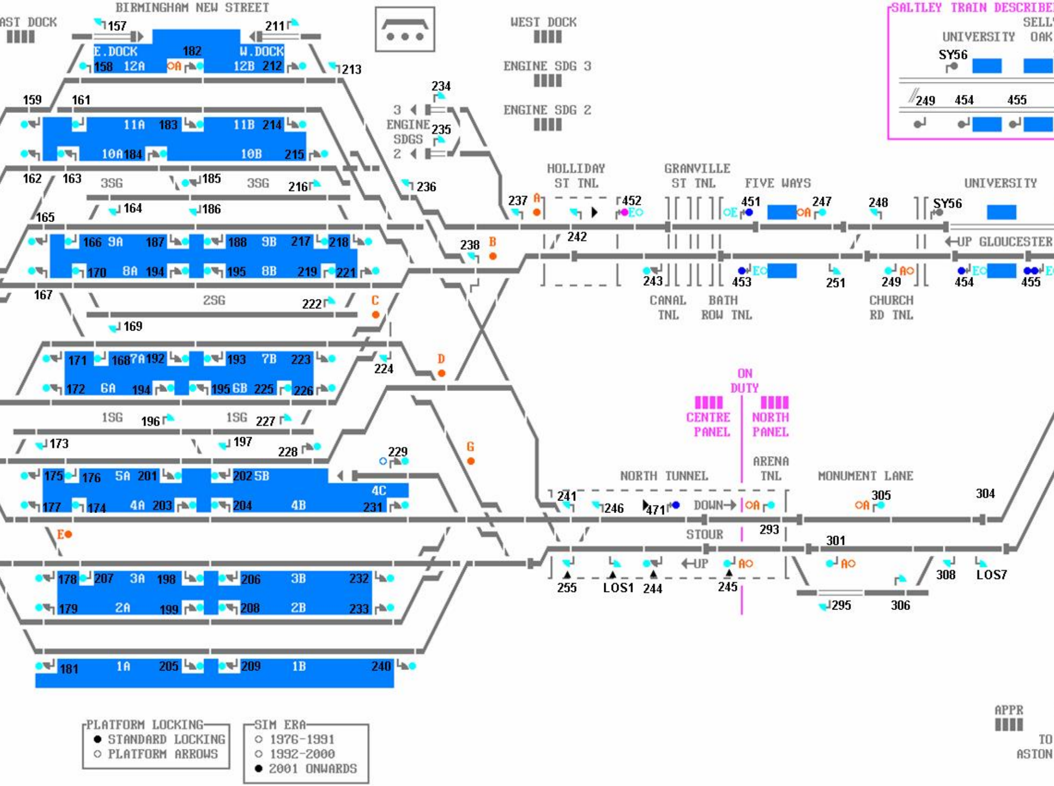
BIRMINGHAM NEW STREET
AST DOCK
WEST DOCK
ENGINE SDG 3
ENGINE SDG 2
SALTLEY TRAIN DESCRIBE
UNIVERSITY
SELL
OAK
SY56
249
454
455
157
211
E.DOCK
182
W.DOCK
158
12A
A
12B
212
213
234
3
ENGINE
SDGS
2
235
159
161
11A
183
11B
214
10A
184
10B
215
162
163
3SG
185
3SG
216
236
HOLLIDAY
ST TNL
GRANVILLE
ST TNL
FIVE WAYS
UNIVERSITY
237
A
452
E
451
E
247
A
248
SY56
164
186
165
166
9A
187
188
9B
217
218
242
UP GLOUCESTER
170
8A
194
195
8B
219
221
238
B
243
453
E
251
249
A
454
E
455
E
167
2SG
222
C
CANAL
TNL
BATH
ROW TNL
CHURCH
RD TNL
169
171
168
7A
192
193
7B
223
224
D
ON
DUTY
172
6A
194
195
6B
225
226
CENTRE
PANEL
NORTH
PANEL
1SG
196
1SG
227
173
197
228
G
229
ARENA
TNL
NORTH TUNNEL
MONUMENT LANE
175
176
5A
201
202
5B
4C
241
246
471
DOWN
A
305
A
304
177
174
4A
203
204
4B
231
293
E
STOUR
301
178
207
3A
198
206
3B
232
UP
A
A
179
2A
199
208
2B
233
255
LOS1
244
245
308
LOS7
295
306
181
1A
205
209
1B
240
APPR
TO
ASTON

PLATFORM LOCKING
● STANDARD LOCKING
○ PLATFORM ARROWS

SIM ERA
○ 1976-1991
○ 1992-2000
● 2001 ONWARDS

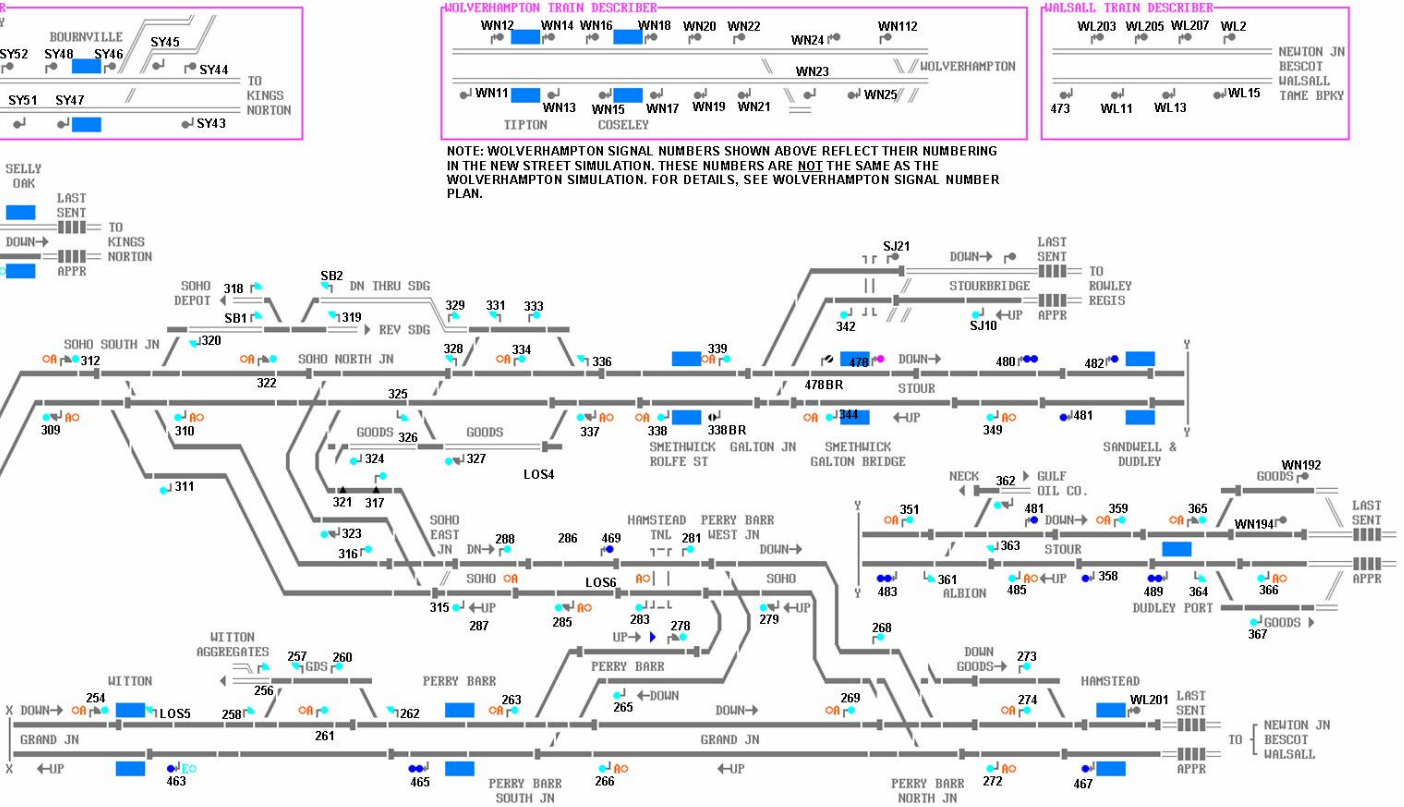

NOTE: WOLVERHAMPTON SIGNAL NUMBERS SHOWN ABOVE REFLECT THEIR NUMBERING IN THE NEW STREET SIMULATION. THESE NUMBERS ARE NOT THE SAME AS THE WOLVERHAMPTON SIMULATION. FOR DETAILS, SEE WOLVERHAMPTON SIGNAL NUMBER PLAN.

BOURNVILLE
SY52
SY48
SY46
SY45
SY44
TO KINGS NORTON
SY51
SY47
SY43
WOLVERHAMPTON TRAIN DESCRIBER
WN12
WN14
WN16
WN18
WN20
WN22
WN24
WN112
WN23
WOLVERHAMPTON
WN11
WN13
WN15
WN17
WN19
WN21
WN25
TIPTON
COSELEY
WALSALL TRAIN DESCRIBER
WL203
WL205
WL207
WL2
NEWTON JN
BESCOT
WALSALL
TAME BPKY
473
WL11
WL13
WL15
SELLY OAK
LAST SENT
DOWN→
TO KINGS NORTON
APPR
SOHO DEPOT
318
SB1
SB2
DN THRU SDG
319
REV SDG
320
329
331
333
SOHO SOUTH JN
OA
312
OA
SOHO NORTH JN
322
328
OA
334
336
339
OA
SJ21
DOWN→
LAST SENT
TO ROWLEY REGIS
STOURBRIDGE
342
SJ10
←UP
APPR
478
478BR
DOWN→
480
482
STOUR
325
309
AO
310
AO
326
GOODS
GOODS
324
327
LOS4
337
AO
OA
338
338BR
SMETHWICK ROLFE ST
GALTON JN
OA
344
←UP
SMETHWICK GALTON BRIDGE
349
AO
481
SANDWELL & DUDLEY
Y
311
321
317
323
316
SOHO EAST JN
DN→
288
286
469
HAMSTEAD TNL
281
PERRY BARR WEST JN
DOWN→
SOHO
OA
LOS6
AO
SOHO
315
←UP
287
285
AO
283
278
UP→
279
←UP
NECK
362
GULF OIL CO.
351
OA
481
DOWN→
359
OA
365
OA
WN192
GOODS
WN194
LAST SENT
363
STOUR
483
361
ALBION
485
AO
←UP
358
489
364
366
AO
DUDLEY PORT
APPR
GOODS
367
268
WITTON AGGREGATES
257
GDS
260
WITTON
256
X
DOWN→
254
OA
LOS5
258
OA
261
262
PERRY BARR
263
OA
PERRY BARR
265
←DOWN
DOWN→
269
OA
DOWN GOODS→
273
HAMSTEAD
274
OA
WL201
LAST SENT
GRAND JN
GRAND JN
←UP
463
EO
465
PERRY BARR SOUTH JN
266
AO
←UP
PERRY BARR NORTH JN
272
AO
467
APPR
TO
NEWTON JN
BESCOT
WALSALL