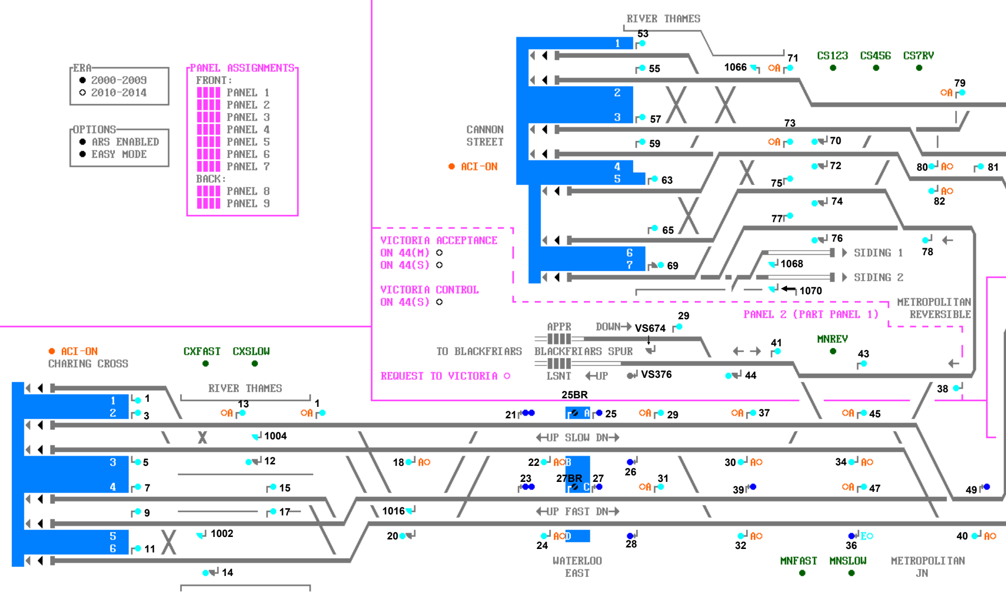
ERA
● 2000-2009
○ 2010-2014
OPTIONS
● ARS ENABLED
● EASY MODE
PANEL ASSIGNMENTS
FRONT:
PANEL 1
PANEL 2
PANEL 3
PANEL 4
PANEL 5
PANEL 6
PANEL 7
BACK:
PANEL 8
PANEL 9
RIVER THAMES
CANNON STREET
● ACI-ON
CS123
CS456
CS7RV
53
55
57
59
63
65
69
71
1066
73
70
72
75
74
77
76
79
80
81
82
78
1068
1070
SIDING 1
SIDING 2
VICTORIA ACCEPTANCE
ON 44(M) ○
ON 44(S) ○
VICTORIA CONTROL
ON 44(S) ○
METROPOLITAN REVERSIBLE
PANEL 2 (PART PANEL 1)
APPR
DOWN→
VS674
29
TO BLACKFRIARS
BLACKFRIARS SPUR
LSNT
←UP
VS376
41
44
MNREV
43
REQUEST TO VICTORIA ○
25BR
38
● ACI-ON
CHARING CROSS
CXFAST
CXSLOW
RIVER THAMES
1
3
13
1
1004
5
12
7
15
9
17
1002
11
14
18
1016
20
21
25
22
23
27BR
27
26
31
28
24
29
37
30
39
32
45
34
47
36
38
49
40
←UP SLOW DN→
←UP FAST DN→
WATERLOO EAST
MNFAST
MNSLOW
METROPOLITAN JN

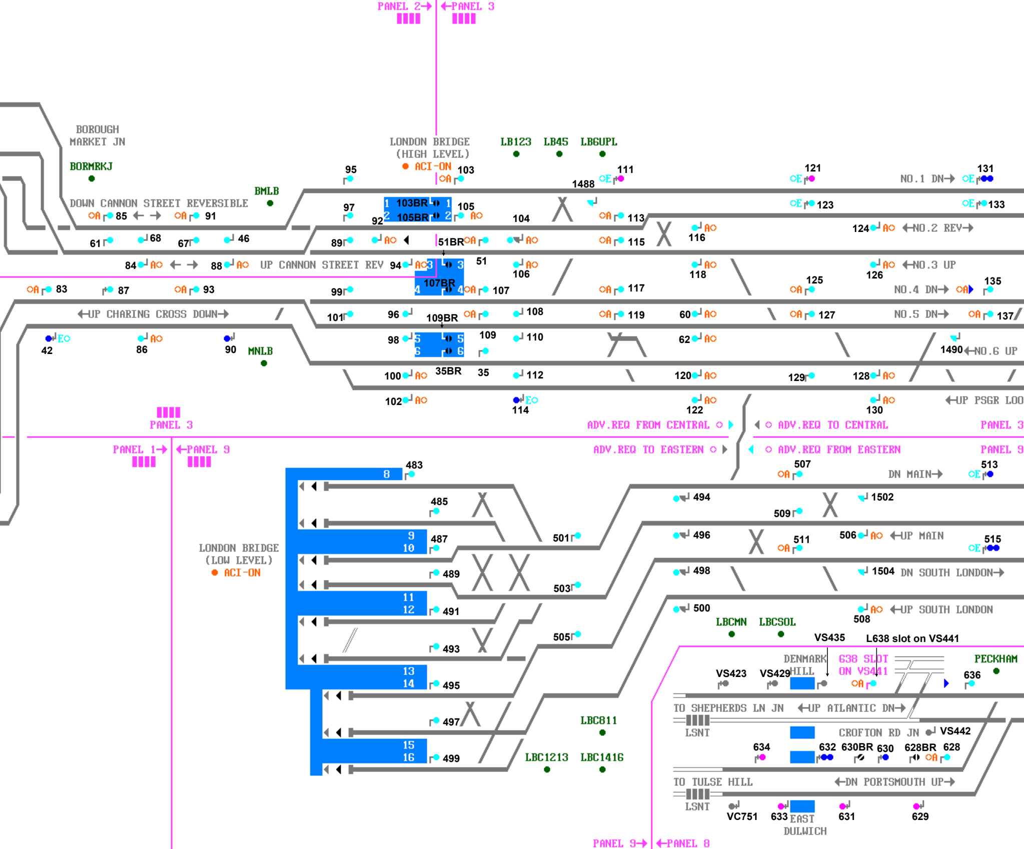
PANEL 2→
←PANEL 3
BOROUGH MARKET JN
BORMRKJ
LONDON BRIDGE (HIGH LEVEL)
ACI-ON
LB123
LB45
LBGUPL
NO.1 DN→
BMLB
DOWN CANNON STREET REVERSIBLE
1 103BR 1
2 105BR 2
51BR
←NO.2 REV→
UP CANNON STREET REV
←NO.3 UP
107BR
NO.4 DN→
←UP CHARING CROSS DOWN→
109BR
NO.5 DN→
MNLB
←NO.6 UP
35BR
←UP PSGR LOO
PANEL 3
ADV.REQ FROM CENTRAL
ADV.REQ TO CENTRAL
PANEL 3
PANEL 1→
←PANEL 9
ADV.REQ TO EASTERN
ADV.REQ FROM EASTERN
PANEL 9
DN MAIN→
1502
←UP MAIN
LONDON BRIDGE (LOW LEVEL)
ACI-ON
1504
DN SOUTH LONDON→
←UP SOUTH LONDON
LBCMN
LBCSOL
VS435
L638 slot on VS441
DENMARK HILL
638 SLOT ON VS441
PECKHAM
VS423
VS429
TO SHEPHERDS LN JN
←UP ATLANTIC DN→
LSNT
LBC811
CROFTON RD JN
VS442
LBC1213
LBC1416
630BR
628BR
TO TULSE HILL
←DN PORTSMOUTH UP→
LSNT
VC751
EAST DULWICH
PANEL 9→
←PANEL 8

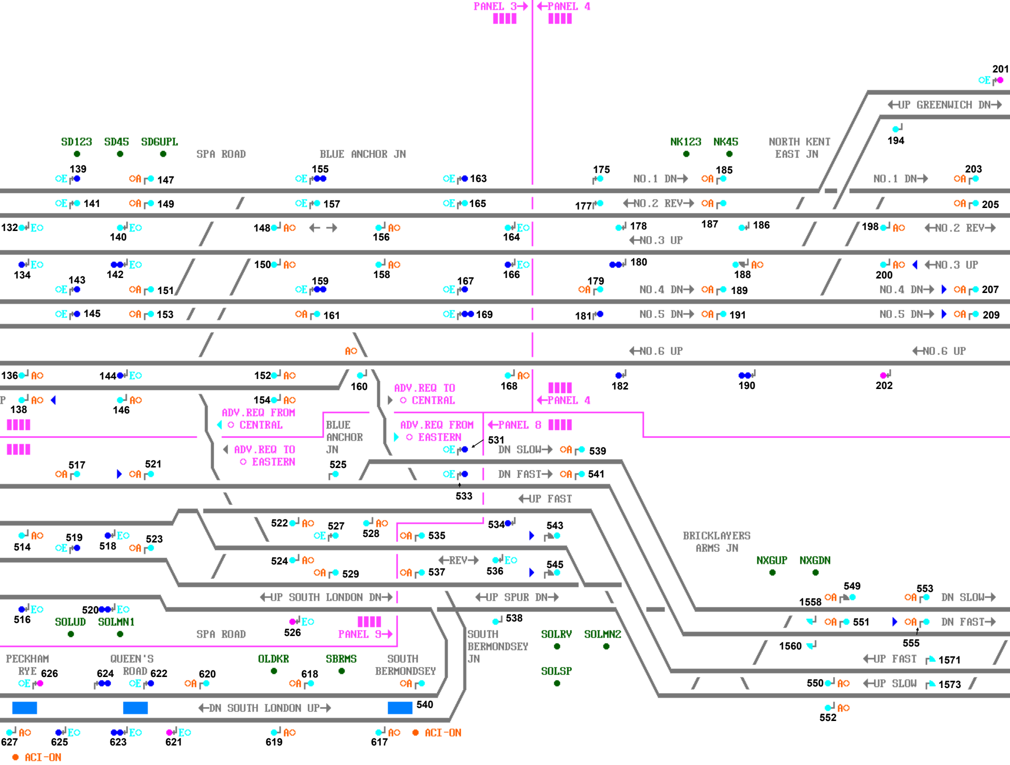
PANEL 3→
←PANEL 4
SD123
SD45
SD6UPL
SPA ROAD
BLUE ANCHOR JN
NK123
NK45
NORTH KENT EAST JN
←UP GREENWICH DN→
NO.1 DN→
←NO.2 REV→
←NO.3 UP
NO.4 DN→
NO.5 DN→
←NO.6 UP
ADV.REQ FROM ○ CENTRAL
ADV.REQ TO ○ CENTRAL
←PANEL 4
BLUE ANCHOR JN
ADV.REQ FROM ○ EASTERN
←PANEL 8
ADV.REQ TO ○ EASTERN
DN SLOW→
DN FAST→
←UP FAST
BRICKLAYERS ARMS JN
NXGUP
NXGDN
←REV→
←UP SOUTH LONDON DN→
←UP SPUR DN→
1558
DN SLOW→
SOLUD
SOLMN1
SPA ROAD
PANEL 9→
SOUTH BERMONDSEY JN
SOLRV
SOLMN2
DN FAST→
1560
←UP FAST
1571
PECKHAM RYE
QUEEN'S ROAD
OLDKR
SBRMS
SOUTH BERMONDSEY
SOLSP
←UP SLOW
1573
←DN SOUTH LONDON UP→
ACI-ON
ACI-ON

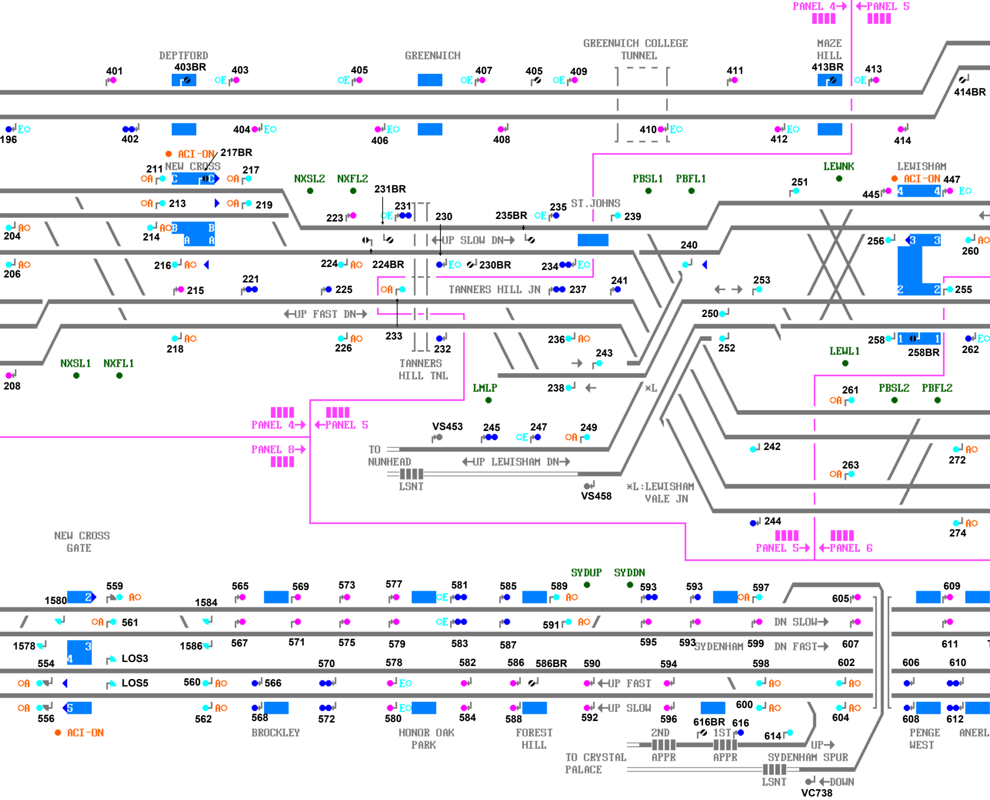
PANEL 4→
←PANEL 5
DEPTFORD
GREENWICH
GREENWICH COLLEGE
TUNNEL
MAZE
HILL
401
403BR
OE
403
405
407
405
409
411
413BR
413
414BR
196
EO
402
404
406
408
410
412
414
ACI-ON
217BR
211
NEW CROSS
217
OA
C
213
219
NXSL2
NXFL2
231BR
231
223
230
235BR
235
ST.JOHNS
239
PBSL1
PBFL1
LEWNK
251
LEWISHAM
ACI-ON
447
445
4
204
AO
214
B
A
←UP SLOW DN→
256
3
260
240
206
216
224
224BR
230BR
234
241
215
221
225
TANNERS HILL JN
237
253
2
255
←UP FAST DN→
250
218
226
233
232
TANNERS
HILL TNL
236
243
252
258
1
258BR
262
NXSL1
NXFL1
LEWL1
208
LMLP
238
×L
261
PBSL2
PBFL2
PANEL 4→
←PANEL 5
PANEL 8→
VS453
245
247
249
TO
NUNHEAD
←UP LEWISHAM DN→
LSNT
VS458
×L:LEWISHAM
VALE JN
242
272
263
244
274
PANEL 5→
←PANEL 6
NEW CROSS
GATE
SYDUP
SYDDN
1580
559
1584
565
569
573
577
581
585
589
593
593
597
605
609
561
591
DN SLOW→
1578
554
1586
LOS3
567
571
575
579
583
587
595
593
SYDENHAM
599
DN FAST→
607
611
570
578
582
586
586BR
590
594
598
602
606
610
LOS5
560
566
←UP FAST
556
562
568
572
580
584
588
592
←UP SLOW
596
600
604
608
612
616BR
616
614
ACI-ON
BROCKLEY
HONOR OAK
PARK
FOREST
HILL
2ND
APPR
1ST
APPR
UP→
SYDENHAM SPUR
TO CRYSTAL
PALACE
LSNT
←DOWN
VC738
PENGE
WEST
ANERL

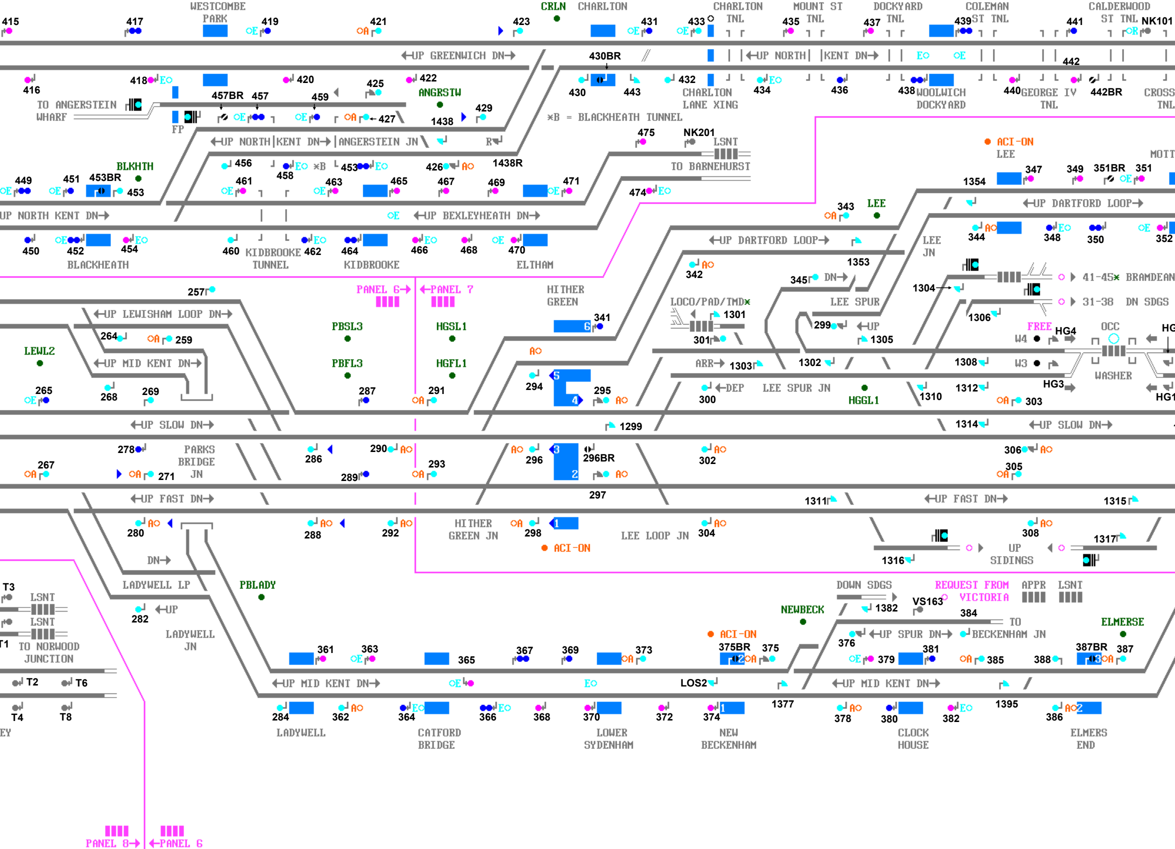
415
417
WESTCOMBE PARK
419
421
423
CRLN
CHARLTON
431
433
CHARLTON TNL
435
MOUNT ST TNL
437
DOCKYARD TNL
439
COLEMAN ST TNL
441
CALDERWOOD ST TNL
NK101
UP GREENWICH DN
430BR
UP NORTH | KENT DN
442
416
418
420
425
422
ANGRSTW
430
443
432
CHARLTON LANE XING
434
436
438
WOOLWICH DOCKYARD
440
GEORGE IV TNL
442BR
CROSS TNL
TO ANGERSTEIN WHARF
457BR
457
459
427
1438
429
FP
*B = BLACKHEATH TUNNEL
UP NORTH | KENT DN | ANGERSTEIN JN
R
475
NK201
LSNT
TO BARNEHURST
ACI-ON
LEE
MOTT
BLKHTH
456
458
*B
453
426
1438R
449
451
453BR
453
461
463
465
467
469
471
474
1354
347
349
351BR
351
UP NORTH KENT DN
UP BEXLEYHEATH DN
343
LEE
UP DARTFORD LOOP
450
452
454
BLACKHEATH
460
KIDBROOKE TUNNEL
462
464
KIDBROOKE
466
468
470
ELTHAM
UP DARTFORD LOOP
LEE JN
344
348
350
352
342
1353
345
DN
1304
41-45* BRAMDEAN
31-38 DN SDGS
257
PANEL 6
PANEL 7
HITHER GREEN
LOCO/PAD/TMD*
LEE SPUR
1306
UP LEWISHAM LOOP DN
PBSL3
HGSL1
341
1301
299
UP
1305
FREE
HG4
OCC
HG
W4
264
259
LEWL2
UP MID KENT DN
PBFL3
HGFL1
301
ARR
1303
1302
1308
W3
WASHER
265
268
269
287
291
294
295
300
DEP
LEE SPUR JN
HGGL1
1310
1312
HG3
303
HG1
UP SLOW DN
1299
1314
UP SLOW DN
278
PARKS BRIDGE JN
286
290
293
296
296BR
302
306
305
267
271
289
297
UP FAST DN
1311
UP FAST DN
1315
280
288
292
HITHER GREEN JN
298
ACI-ON
LEE LOOP JN
304
308
1317
1316
UP SIDINGS
DN
LADYWELL LP
PBLADY
T3
LSNT
LSNT
T1
TO NORWOOD JUNCTION
282
UP
LADYWELL JN
DOWN SDGS
1382
VS163
REQUEST FROM VICTORIA
APPR
LSNT
384
TO
NEWBECK
ELMERSE
ACI-ON
UP SPUR DN
BECKENHAM JN
376
375BR
375
381
387BR
387
361
363
365
367
369
373
379
385
388
T2
T6
UP MID KENT DN
LOS2
UP MID KENT DN
T4
T8
284
362
364
366
368
370
372
374
1377
378
380
382
1395
386
LADYWELL
CATFORD BRIDGE
LOWER SYDENHAM
NEW BECKENHAM
CLOCK HOUSE
ELMERS END
PANEL 8
PANEL 6

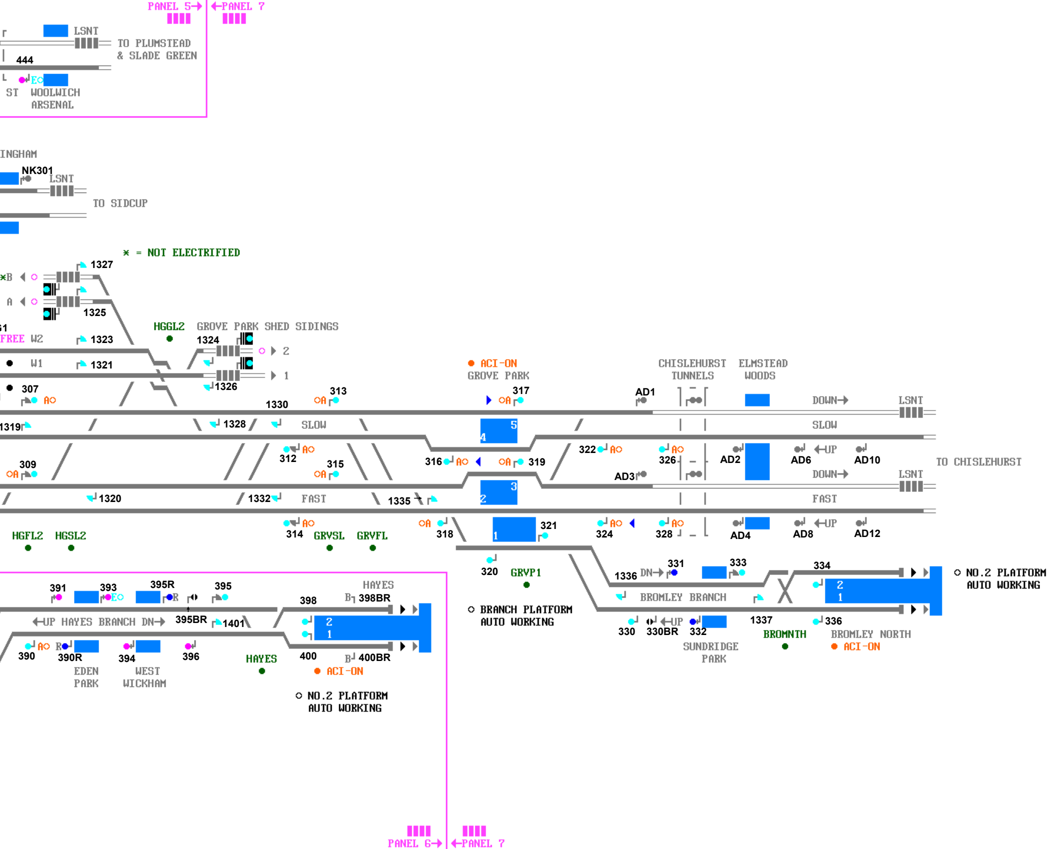
PANEL 5
PANEL 7
LSNT
TO PLUMSTEAD
& SLADE GREEN
444
EO
ST
WOOLWICH
ARSENAL
INGHAM
NK301
LSNT
TO SIDCUP
* = NOT ELECTRIFIED
1327
*B
A
1325
1323
FREE
W2
W1
1321
HGGL2
GROVE PARK SHED SIDINGS
1324
2
1
1326
307
AO
1330
313
OA
ACI-ON
GROVE PARK
317
OA
AD1
CHISLEHURST
TUNNELS
ELMSTEAD
WOODS
DOWN
LSNT
1319
1328
SLOW
5
4
SLOW
312
AO
315
OA
316
AO
OA
319
322
AO
326
AO
AD2
AD6
UP
AD10
309
OA
AD3
DOWN
LSNT
TO CHISLEHURST
3
2
1320
1332
FAST
1335
FAST
AO
314
GRVSL
GRVFL
OA
318
1
321
AO
324
AO
328
AD4
AD8
UP
AD12
HGFL2
HGSL2
320
GRVP1
1336
DN
331
333
334
2
1
NO.2 PLATFORM
AUTO WORKING
391
393
EO
395R
R
395
398
HAYES
B
398BR
BROMLEY BRANCH
UP HAYES BRANCH DN
395BR
1401
2
1
BRANCH PLATFORM
AUTO WORKING
AO
R
390
390R
394
396
HAYES
400
B
400BR
ACI-ON
EDEN
PARK
WEST
WICKHAM
NO.2 PLATFORM
AUTO WORKING
330
330BR
UP
332
1337
336
SUNDRIDGE
PARK
BROMNTH
BROMLEY NORTH
ACI-ON
PANEL 6
PANEL 7