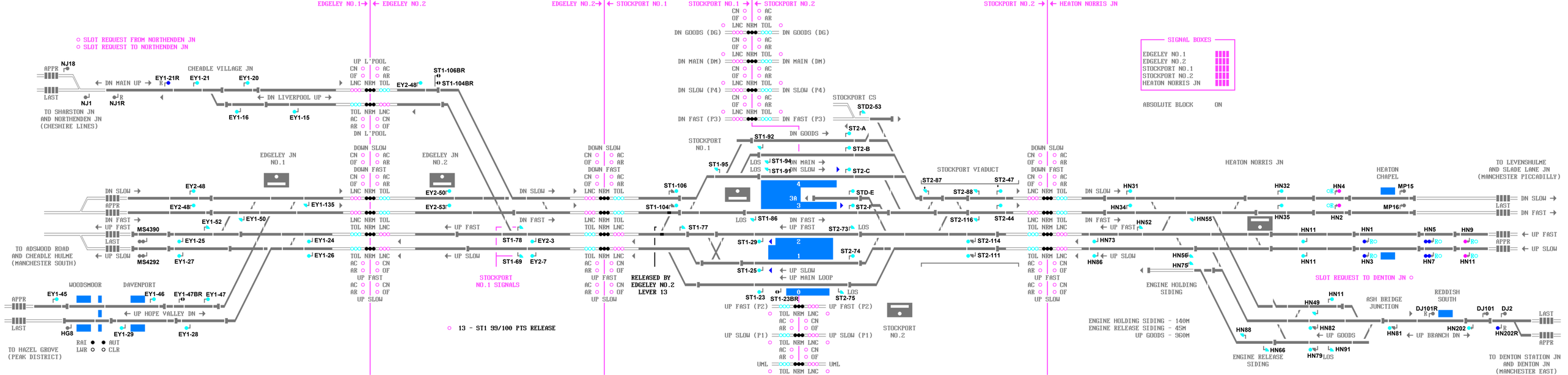
EDGELEY NO.1 → ← EDGELEY NO.2
EDGELEY NO.2 → ← STOCKPORT NO.1
STOCKPORT NO.1 → ← STOCKPORT NO.2
STOCKPORT NO.2 → ← HEATON NORRIS JN
SLOT REQUEST FROM NORTHENDEN JN
SLOT REQUEST TO NORTHENDEN JN
SIGNAL BOXES
EDGELEY NO.1
EDGELEY NO.2
STOCKPORT NO.1
STOCKPORT NO.2
HEATON NORRIS JN
ABSOLUTE BLOCK ON
NJ18
APPR
LAST
NJ1
NJ1R
TO SHARSTON JN AND NORTHENDEN JN (CHESHIRE LINES)
DN MAIN UP
CHEADLE VILLAGE JN
EY1-21R
EY1-21
EY1-20
EY1-16
EY1-15
DN LIVERPOOL UP
UP L'POOL
DN L'POOL
EY2-48
ST1-106BR
ST1-104BR
EDGELEY JN NO.1
EDGELEY JN NO.2
DOWN SLOW
DOWN FAST
EY2-48
EY2-50
EY2-53
EY1-135
EY1-52
EY1-50
MS4390
EY1-25
EY1-24
MS4292
EY1-27
EY1-26
DN SLOW
DN FAST
UP FAST
UP SLOW
TO ADSWOOD ROAD AND CHEADLE HULME (MANCHESTER SOUTH)
ST1-78
EY2-3
ST1-69
EY2-7
STOCKPORT NO.1 SIGNALS
WOODSMOOR
DAVENPORT
EY1-45
EY1-46
EY1-47BR
EY1-47
UP HOPE VALLEY DN
HG8
EY1-29
EY1-28
TO HAZEL GROVE (PEAK DISTRICT)
RAI
AUT
LWR
CLR
13 - ST1 39/100 PTS RELEASE
DN GOODS (DG)
DN MAIN (DM)
DN SLOW (P4)
DN FAST (P3)
UP FAST (P2)
UP SLOW (P1)
UML
CN
AC
OF
AR
LNC NRM TOL
TOL NRM LNC
STOCKPORT CS
STD2-53
ST2-A
ST2-B
ST2-C
STD-E
ST2-F
ST1-92
ST1-94
ST1-91
ST1-95
ST1-106
ST1-104
ST1-86
ST1-77
ST1-29
ST1-25
ST2-73
ST2-74
ST2-75
ST1-23
ST1-23BR
DN GOODS
DN MAIN
DN SLOW
DN FAST
UP FAST
UP SLOW
UP MAIN LOOP
LOS
RELEASED BY EDGELEY NO.2 LEVER 13
STOCKPORT NO.2
STOCKPORT VIADUCT
ST2-87
ST2-88
ST2-47
ST2-116
ST2-44
ST2-114
ST2-111
HN31
HN34
HN52
HN55
HN73
HN86
HN56
HN75
ENGINE HOLDING SIDING
ENGINE HOLDING SIDING - 140M
ENGINE RELEASE SIDING - 45M
UP GOODS - 960M
HN32
HN35
HN4
HN2
HEATON CHAPEL
MP15
MP16
HEATON NORRIS JN
TO LEVENSHULME AND SLADE LANE JN (MANCHESTER PICCADILLY)
HN11
HN1
HN3
HN5
HN7
HN9
SLOT REQUEST TO DENTON JN
HN49
HN82
UP GOODS
HN88
HN66
ENGINE RELEASE SIDING
HN79
HN91
ASH BRIDGE JUNCTION
HN81
REDDISH SOUTH
DJ101R
DJ101
DJ2
HN202
UP BRANCH DN
HN202R
TO DENTON STATION JN AND DENTON JN (MANCHESTER EAST)