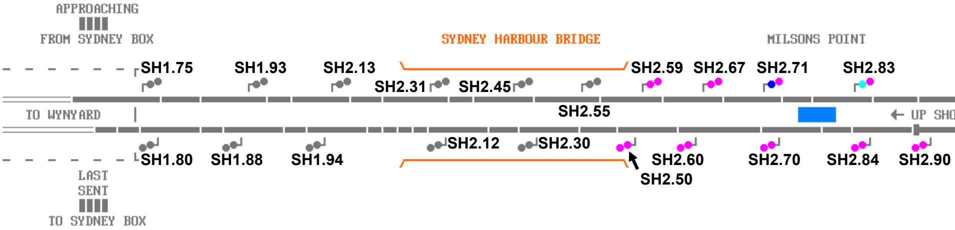
APPROACHING
FROM SYDNEY BOX
SYDNEY HARBOUR BRIDGE
MILSONS POINT
SH1.75
SH1.93
SH2.13
SH2.31
SH2.45
SH2.59
SH2.67
SH2.71
SH2.83
TO WYNYARD
SH2.55
UP SHO
SH1.80
SH1.88
SH1.94
SH2.12
SH2.30
SH2.60
SH2.70
SH2.84
SH2.90
SH2.50
LAST
SENT
TO SYDNEY BOX

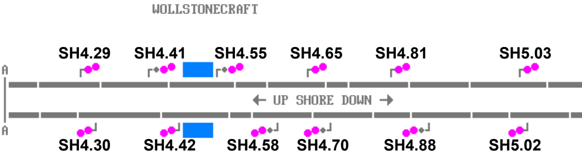
WOLLSTONECRAFT
SH4.29
SH4.41
SH4.55
SH4.65
SH4.81
SH5.03
A
UP SHORE DOWN
A
SH4.30
SH4.42
SH4.58
SH4.70
SH4.88
SH5.02

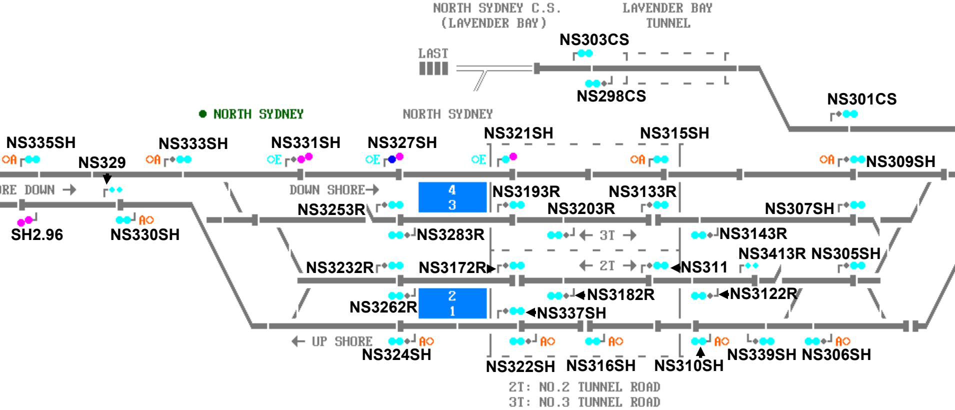
NORTH SYDNEY C.S.
(LAVENDER BAY)
LAVENDER BAY
TUNNEL
NS303CS
LAST
NS298CS
NS301CS
NORTH SYDNEY
NORTH SYDNEY
NS335SH
NS329
NS333SH
NS331SH
NS327SH
NS321SH
NS315SH
NS309SH
A
A
E
E
E
A
A
RE DOWN →
DOWN SHORE→
4
3
NS3193R
NS3133R
NS3253R
NS3203R
NS307SH
SH2.96
NS330SH
A
NS3283R
← 3T →
NS3143R
NS3232R
NS3172R
← 2T →
NS311
NS3413R
NS305SH
2
1
NS3262R
NS3182R
NS3122R
NS337SH
← UP SHORE
A
A
A
A
A
NS324SH
NS322SH
NS316SH
NS310SH
NS339SH
NS306SH
2T: NO.2 TUNNEL ROAD
3T: NO.3 TUNNEL ROAD

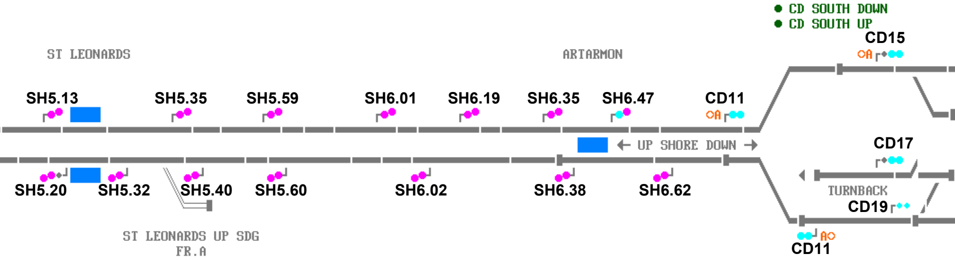
CD SOUTH DOWN
CD SOUTH UP
ST LEONARDS
ARTARMON
CD15
A
SH5.13
SH5.35
SH5.59
SH6.01
SH6.19
SH6.35
SH6.47
CD11
A
← UP SHORE DOWN →
CD17
SH5.20
SH5.32
SH5.40
SH5.60
SH6.02
SH6.38
SH6.62
TURNBACK
CD19
CD11
A
ST LEONARDS UP SDG
FR.A

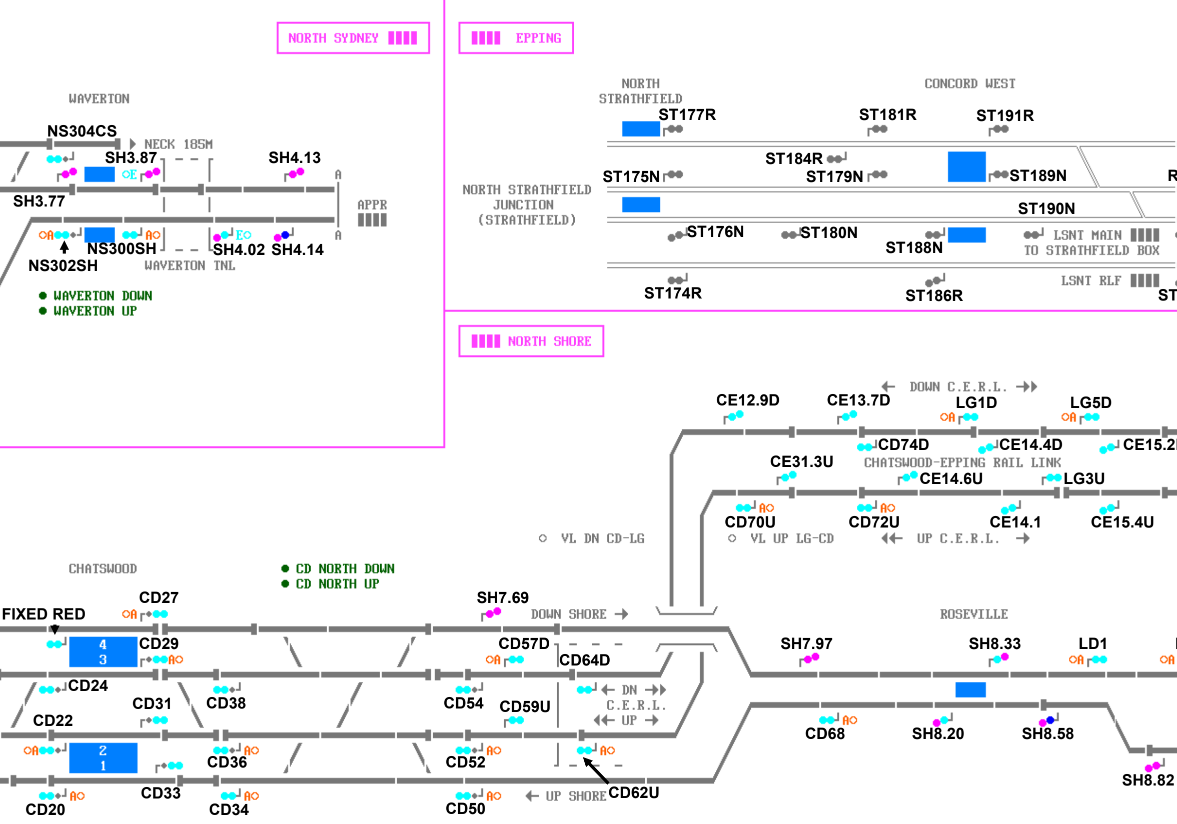
NORTH SYDNEY
EPPING
WAVERTON
NS304CS
NECK 185M
SH3.87
OE
SH4.13
A
SH3.77
APPR
OA
AO
EO
NS300SH
SH4.02
SH4.14
A
NS302SH
WAVERTON TNL
● WAVERTON DOWN
● WAVERTON UP
NORTH STRATHFIELD
CONCORD WEST
ST177R
ST181R
ST191R
ST184R
ST175N
ST179N
ST189N
R
NORTH STRATHFIELD JUNCTION (STRATHFIELD)
ST190N
ST176N
ST180N
ST188N
LSNT MAIN
TO STRATHFIELD BOX
ST174R
ST186R
LSNT RLF
ST
NORTH SHORE
DOWN C.E.R.L.
CE12.9D
CE13.7D
LG1D
LG5D
OA
CD74D
CE14.4D
CE15.2
CE31.3U
CHATSWOOD-EPPING RAIL LINK
CE14.6U
LG3U
AO
CD70U
CD72U
CE14.1
CE15.4U
○ VL DN CD-LG
○ VL UP LG-CD
UP C.E.R.L.
CHATSWOOD
● CD NORTH DOWN
● CD NORTH UP
CD27
SH7.69
DOWN SHORE
ROSEVILLE
FIXED RED
4
3
CD29
CD57D
CD64D
SH7.97
SH8.33
LD1
CD24
CD31
CD38
CD54
CD59U
DN
C.E.R.L.
UP
CD22
CD68
SH8.20
SH8.58
2
1
CD36
CD52
SH8.82
CD33
CD62U
CD20
CD34
CD50
UP SHORE

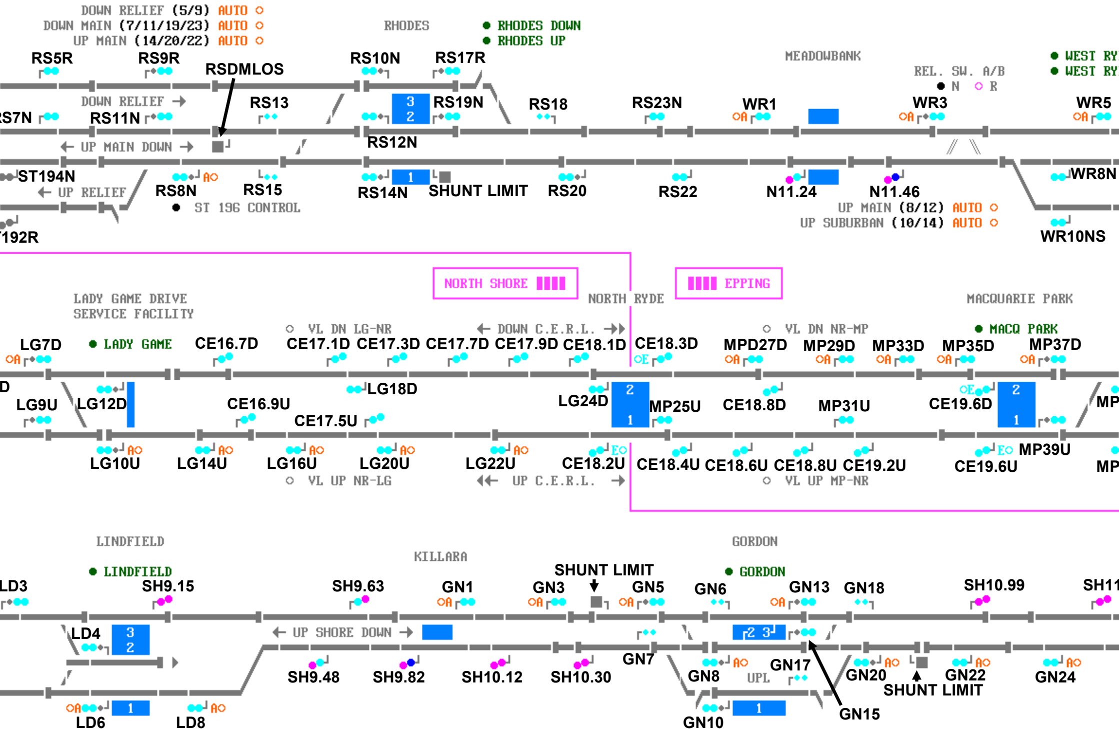
DOWN RELIEF (5/9) AUTO ○
DOWN MAIN (7/11/19/23) AUTO ○
UP MAIN (14/20/22) AUTO ○
RHODES
● RHODES DOWN
● RHODES UP
MEADOWBANK
REL. SW. A/B
● N ○ R
● WEST RY
● WEST RY
RS5R
RS9R
RSDMLOS
RS10N
RS17R
DOWN RELIEF →
S7N
RS11N
RS13
3
2
RS19N
RS18
RS23N
WR1
WR3
WR5
○A
← UP MAIN DOWN →
RS12N
ST194N
← UP RELIEF
RS8N
A○
RS15
1
RS14N
SHUNT LIMIT
RS20
RS22
N11.24
N11.46
WR8N
● ST 196 CONTROL
UP MAIN (8/12) AUTO ○
UP SUBURBAN (10/14) AUTO ○
192R
WR10NS
NORTH SHORE ▮▮▮▮
NORTH RYDE
▮▮▮▮ EPPING
LADY GAME DRIVE
SERVICE FACILITY
MACQUARIE PARK
○ VL DN LG-NR
← DOWN C.E.R.L. →→
○ VL DN NR-MP
● MACQ PARK
LG7D
● LADY GAME
CE16.7D
CE17.1D
CE17.3D
CE17.7D
CE17.9D
CE18.1D
CE18.3D
MPD27D
MP29D
MP33D
MP35D
MP37D
○E
D
LG9U
LG12D
LG18D
CE16.9U
CE17.5U
LG24D
2
1
MP25U
CE18.8D
MP31U
CE19.6D
MP
LG10U
LG14U
LG16U
LG20U
LG22U
CE18.2U
CE18.4U
CE18.6U
CE18.8U
CE19.2U
CE19.6U
MP39U
E○
MP
○ VL UP NR-LG
←← UP C.E.R.L. →
○ VL UP MP-NR
LINDFIELD
KILLARA
GORDON
● LINDFIELD
● GORDON
LD3
SH9.15
SH9.63
GN1
GN3
SHUNT LIMIT
GN5
GN6
GN13
GN18
SH10.99
SH11
LD4
3
2
← UP SHORE DOWN →
2 3
SH9.48
SH9.82
SH10.12
SH10.30
GN7
GN8
GN17
UPL
GN20
GN22
GN24
SHUNT LIMIT
1
LD6
LD8
GN10
1
GN15

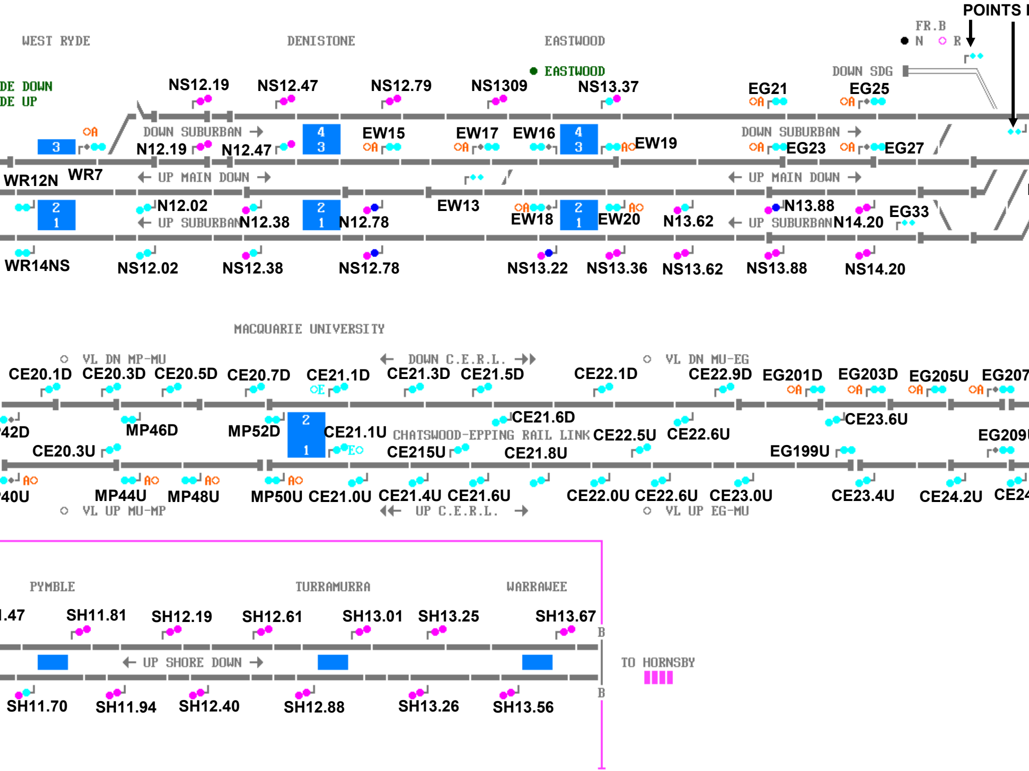
POINTS I
FR.B
● N ○ R
WEST RYDE
DENISTONE
EASTWOOD
● EASTWOOD
DE DOWN
DE UP
DOWN SDG
NS12.19
NS12.47
NS12.79
NS1309
NS13.37
EG21
EG25
DOWN SUBURBAN →
3
4
3
4
3
N12.19
N12.47
EW15
EW17
EW16
EW19
DOWN SUBURBAN →
EG23
EG27
WR12N
WR7
← UP MAIN DOWN →
← UP MAIN DOWN →
2
1
N12.02
← UP SUBURBAN
N12.38
2
1
N12.78
EW13
EW18
2
1
EW20
N13.62
← UP SUBURBAN
N13.88
N14.20
EG33
WR14NS
NS12.02
NS12.38
NS12.78
NS13.22
NS13.36
NS13.62
NS13.88
NS14.20
MACQUARIE UNIVERSITY
○ VL DN MP-MU
← DOWN C.E.R.L. →
○ VL DN MU-EG
CE20.1D
CE20.3D
CE20.5D
CE20.7D
CE21.1D
CE21.3D
CE21.5D
CE22.1D
CE22.9D
EG201D
EG203D
EG205U
EG207
42D
MP46D
MP52D
2
1
CE21.1U
CHATSWOOD-EPPING RAIL LINK
CE21.6D
CE22.5U
CE22.6U
CE23.6U
EG209
CE20.3U
CE215U
CE21.8U
EG199U
40U
MP44U
MP48U
MP50U
CE21.0U
CE21.4U
CE21.6U
CE22.0U
CE22.6U
CE23.0U
CE23.4U
CE24.2U
CE24
○ VL UP MU-MP
← UP C.E.R.L. →
○ VL UP EG-MU
PYMBLE
TURRAMURRA
WARRAWEE
1.47
SH11.81
SH12.19
SH12.61
SH13.01
SH13.25
SH13.67
B
← UP SHORE DOWN →
TO HORNSBY
B
SH11.70
SH11.94
SH12.40
SH12.88
SH13.26
SH13.56

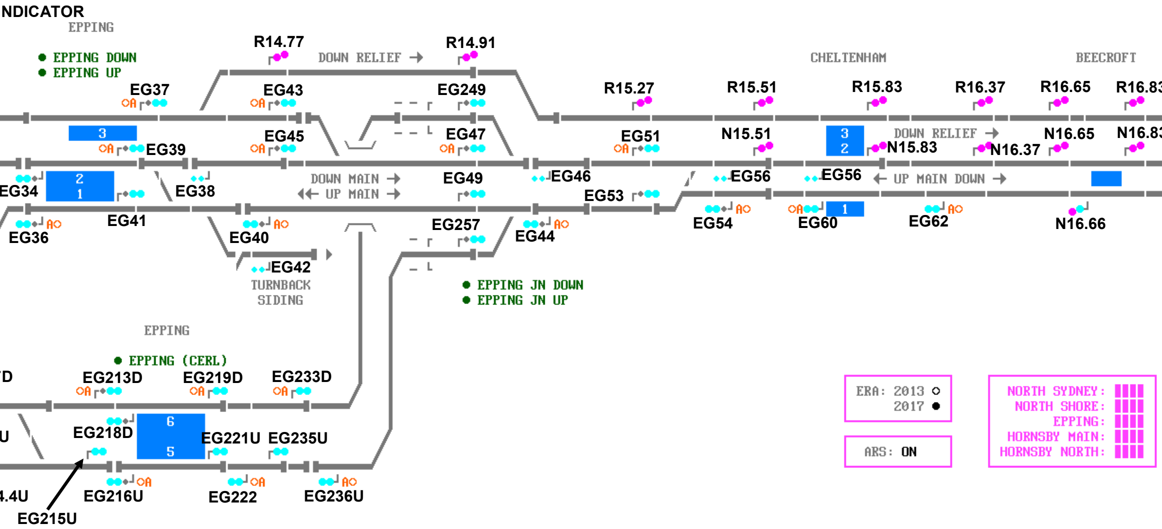
NDICATOR
EPPING
● EPPING DOWN
● EPPING UP
R14.77
DOWN RELIEF →
R14.91
CHELTENHAM
BEECROFT
EG37
EG43
EG249
R15.27
R15.51
R15.83
R16.37
R16.65
R16.83
3
EG39
EG45
EG47
EG51
N15.51
3
2
DOWN RELIEF →
N15.83
N16.37
N16.65
N16.83
2
1
EG34
EG38
DOWN MAIN →
UP MAIN →
EG49
EG46
EG56
EG56
← UP MAIN DOWN →
EG53
EG41
EG36
EG40
EG257
EG44
EG54
1
EG60
EG62
N16.66
EG42
TURNBACK SIDING
● EPPING JN DOWN
● EPPING JN UP
EPPING
● EPPING (CERL)
D
EG213D
EG219D
EG233D
U
EG218D
6
5
EG221U
EG235U
.4U
EG216U
EG222
EG236U
EG215U

ERA: 2013 ○
2017 ●

ARS: ON

NORTH SYDNEY:	▮▮▮▮
NORTH SHORE:	▮▮▮▮
EPPING:	▮▮▮▮
HORNSBY MAIN:	▮▮▮▮
HORNSBY NORTH:	▮▮▮▮

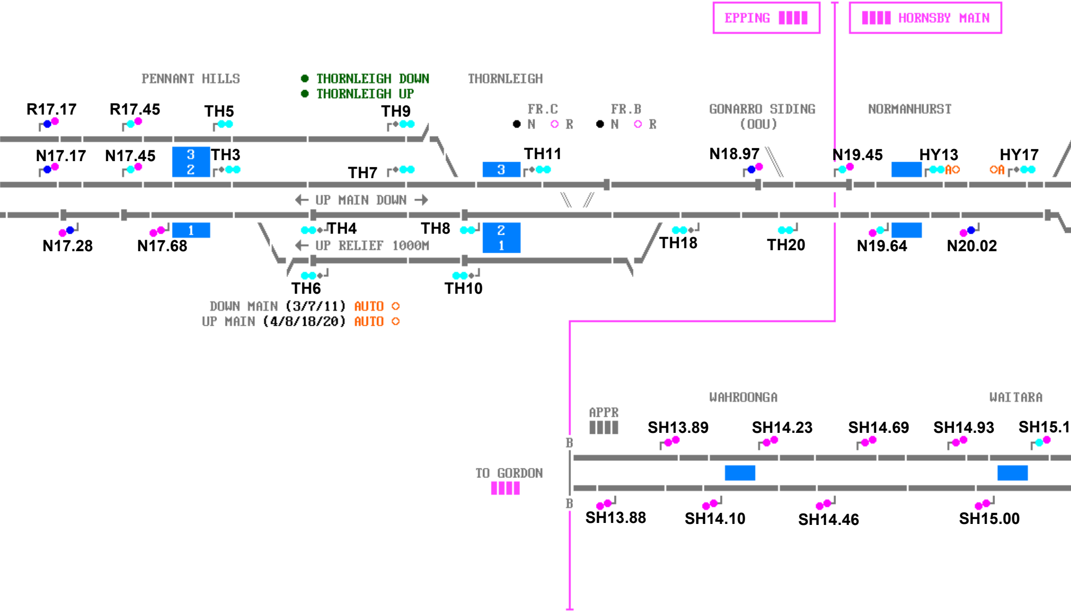
EPPING
HORNSBY MAIN
PENNANT HILLS
● THORNLEIGH DOWN
● THORNLEIGH UP
THORNLEIGH
FR.C
● N ○ R
FR.B
● N ○ R
GONARRO SIDING
(OOU)
NORMANHURST
R17.17
R17.45
TH5
TH9
N17.17
N17.45
3
2
TH3
TH7
3
TH11
N18.97
N19.45
HY13
A
A
HY17
← UP MAIN DOWN →
N17.28
N17.68
1
TH4
TH8
2
1
TH18
TH20
N19.64
N20.02
← UP RELIEF 1000M
TH6
TH10
DOWN MAIN (3/7/11) AUTO ○
UP MAIN (4/8/18/20) AUTO ○
WAHROONGA
WAITARA
APPR
B
SH13.89
SH14.23
SH14.69
SH14.93
SH15.1
TO GORDON
B
SH13.88
SH14.10
SH14.46
SH15.00

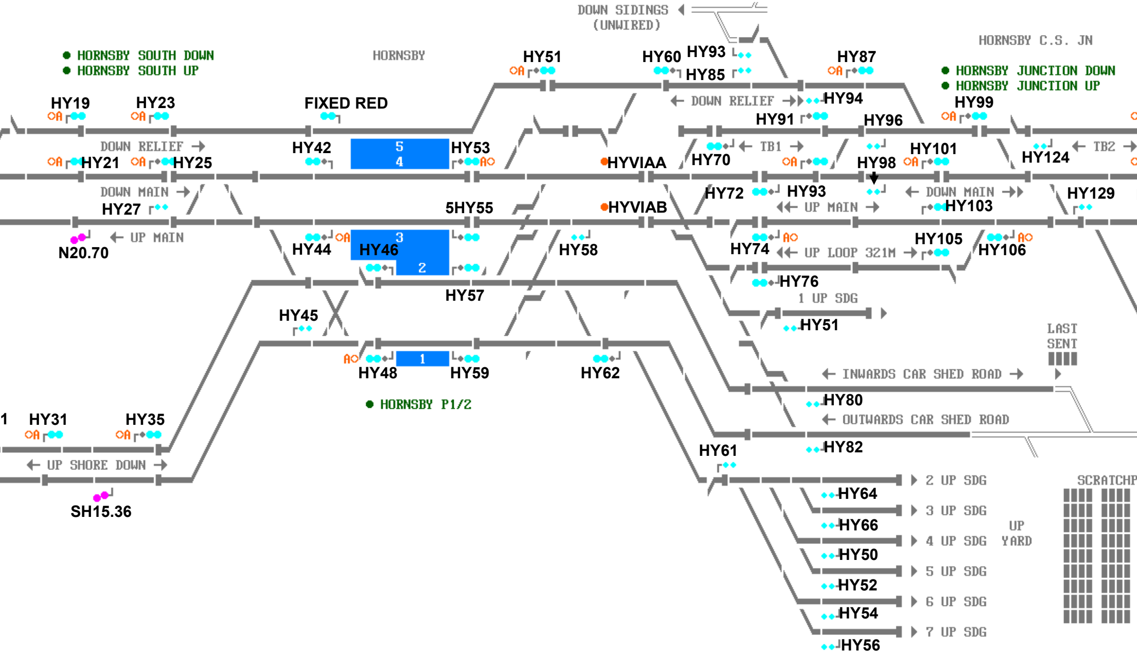
DOWN SIDINGS
(UNWIRED)
HORNSBY SOUTH DOWN
HORNSBY SOUTH UP
HORNSBY
HORNSBY C.S. JN
HORNSBY JUNCTION DOWN
HORNSBY JUNCTION UP
HY51
HY60
HY93
HY85
HY87
HY19
HY23
FIXED RED
DOWN RELIEF
HY94
HY99
HY91
HY96
DOWN RELIEF
HY42
5
4
HY53
HY21
HY25
HYVIAA
HY70
TB1
HY101
HY124
TB2
HY98
DOWN MAIN
HY72
HY93
DOWN MAIN
HY129
HY27
5HY55
HYVIAB
UP MAIN
HY103
UP MAIN
3
HY44
HY46
HY58
HY74
UP LOOP 321M
HY105
HY106
N20.70
2
HY76
HY57
1 UP SDG
HY45
HY51
LAST
SENT
1
HY48
HY59
HY62
INWARDS CAR SHED ROAD
HY80
HORNSBY P1/2
OUTWARDS CAR SHED ROAD
1
HY31
HY35
HY82
HY61
UP SHORE DOWN
2 UP SDG
SCRATCHP
SH15.36
HY64
3 UP SDG
HY66
UP
YARD
4 UP SDG
HY50
5 UP SDG
HY52
6 UP SDG
HY54
7 UP SDG
HY56

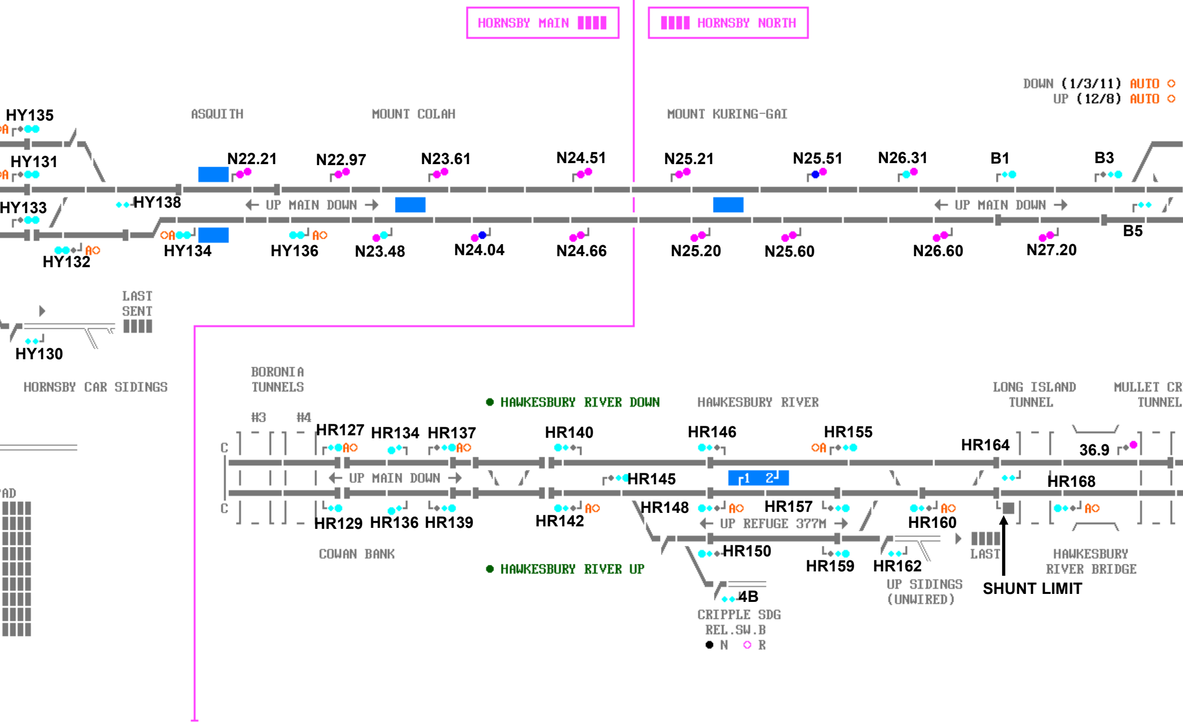
HORNSBY MAIN
HORNSBY NORTH
DOWN (1/3/11) AUTO
UP (12/8) AUTO
ASQUITH
MOUNT COLAH
MOUNT KURING-GAI
HY135
HY131
HY133
HY138
HY134
HY132
HY136
N22.21
N22.97
N23.61
N24.51
N25.21
N25.51
N26.31
B1
B3
B5
UP MAIN DOWN
UP MAIN DOWN
N23.48
N24.04
N24.66
N25.20
N25.60
N26.60
N27.20
LAST
SENT
HY130
HORNSBY CAR SIDINGS
BORONIA
TUNNELS
#3
#4
HAWKESBURY RIVER DOWN
HAWKESBURY RIVER
LONG ISLAND
TUNNEL
MULLET CR
TUNNEL
C
C
HR127
HR134
HR137
HR140
HR146
HR155
HR164
36.9
UP MAIN DOWN
HR145
1
2
HR168
HR129
HR136
HR139
HR142
HR148
HR157
HR160
UP REFUGE 377M
HR150
HR159
HR162
LAST
COWAN BANK
HAWKESBURY RIVER UP
UP SIDINGS
(UNWIRED)
SHUNT LIMIT
HAWKESBURY
RIVER BRIDGE
4B
CRIPPLE SDG
REL.SW.B
N
R

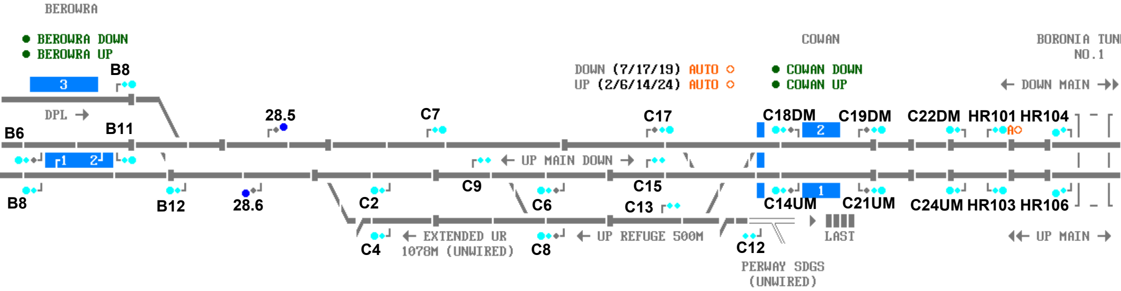
BEROWRA
● BEROWRA DOWN
● BEROWRA UP
3
B8
DPL →
B6
B11
28.5
C7
C17
1
2
← UP MAIN DOWN →
B8
B12
28.6
C2
C9
C6
C15
C13
C4
← EXTENDED UR
1078M (UNWIRED)
C8
← UP REFUGE 500M
C12
PERWAY SDGS
(UNWIRED)
COWAN
DOWN (7/17/19) AUTO ○
UP (2/6/14/24) AUTO ○
● COWAN DOWN
● COWAN UP
BORONIA TUN
NO.1
← DOWN MAIN →
C18DM
2
C19DM
C22DM
HR101
HR104
A○
1
C14UM
C21UM
C24UM
HR103
HR106
LAST
← UP MAIN →

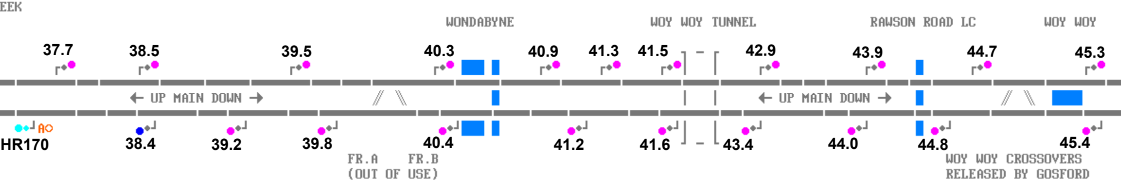
EEK
WONDABYNE
WOY WOY TUNNEL
RAWSON ROAD LC
WOY WOY
37.7
38.5
39.5
40.3
40.9
41.3
41.5
42.9
43.9
44.7
45.3
← UP MAIN DOWN →
← UP MAIN DOWN →
A○
HR170
38.4
39.2
39.8
40.4
41.2
41.6
43.4
44.0
44.8
45.4
FR.A
FR.B
(OUT OF USE)
WOY WOY CROSSOVERS
RELEASED BY GOSFORD

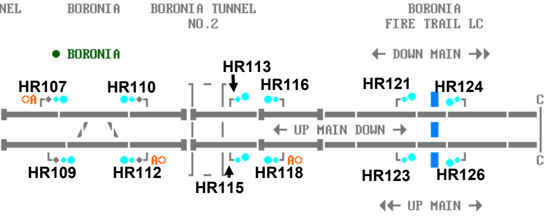
NEL
BORONIA
BORONIA TUNNEL
NO.2
BORONIA
FIRE TRAIL LC
● BORONIA
← DOWN MAIN →
HR113
HR107
HR110
HR116
HR121
HR124
OA
C
← UP MAIN DOWN →
AO
AO
C
HR109
HR112
HR118
HR123
HR126
HR115
← UP MAIN →

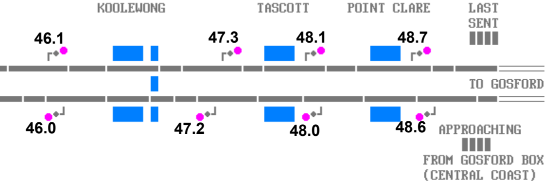
KOOLEWONG
TASCOTT
POINT CLARE
LAST
SENT
46.1
47.3
48.1
48.7
TO GOSFORD
46.0
47.2
48.0
48.6
APPROACHING
FROM GOSFORD BOX
(CENTRAL COAST)