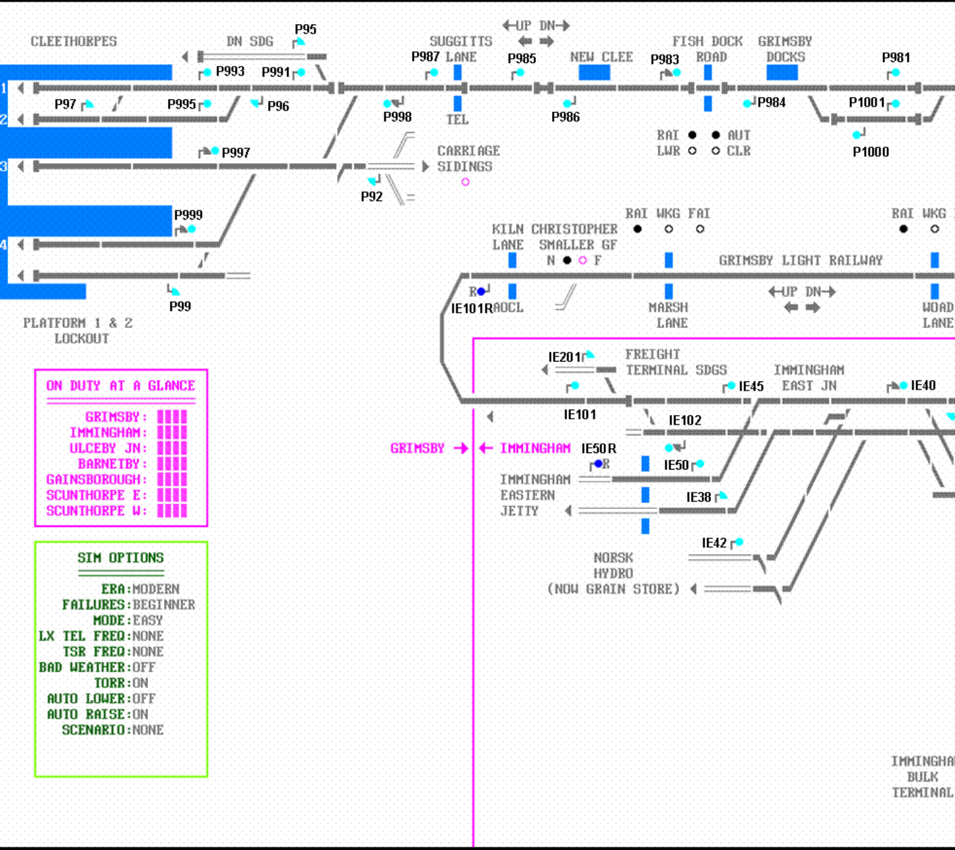
CLEETHORPES
DN SDG
P95
P993
P991
SUGGITTS
P987 LANE
←UP DN→
P985
NEW CLEE
P983
FISH DOCK
ROAD
GRIMSBY
DOCKS
P981
1
2
3
4
P97
P995
P96
P998
TEL
P986
P984
P1001
RAI ● ● AUT
LWR ○ ○ CLR
P1000
P997
CARRIAGE
SIDINGS
P92
P999
RAI WKG FAI
KILN CHRISTOPHER
LANE SMALLER GF
N ● ○ F
GRIMSBY LIGHT RAILWAY
RAI WKG
P99
R
IE101R
AOCL
MARSH
LANE
←UP DN→
WOAD
LANE
PLATFORM 1 & 2
LOCKOUT
IE201
FREIGHT
TERMINAL SDGS
IMMINGHAM
EAST JN
IE45
IE40
IE101
IE102
GRIMSBY →
← IMMINGHAM
IE50R
R
IE50
IMMINGHAM
EASTERN
JETTY
IE38
IE42
NORSK
HYDRO
(NOW GRAIN STORE)
IMMINGHAM
BULK
TERMINAL

ON DUTY AT A GLANCE

GRIMSBY: ▮▮▮▮
IMMINGHAM: ▮▮▮▮
ULCEBY JN: ▮▮▮▮
BARNETBY: ▮▮▮▮
GAINSBOROUGH: ▮▮▮▮
SCUNTHORPE E: ▮▮▮▮
SCUNTHORPE W: ▮▮▮▮

SIM OPTIONS

ERA: MODERN
FAILURES: BEGINNER
MODE: EASY
LX TEL FREQ: NONE
TSR FREQ: NONE
BAD WEATHER: OFF
TORR: ON
AUTO LOWER: OFF
AUTO RAISE: ON
SCENARIO: NONE

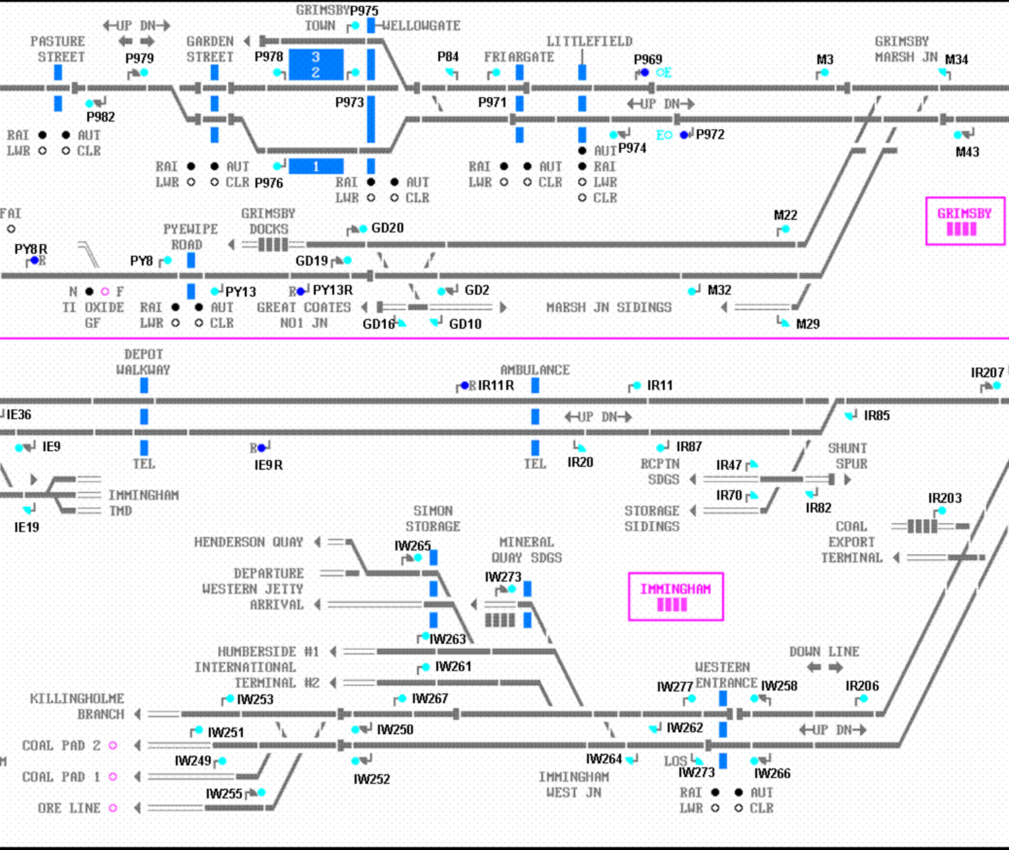
GRIMSBY TOWN
P975
WELLOWGATE
UP DN
PASTURE STREET
GARDEN STREET
LITTLEFIELD
GRIMSBY MARSH JN
P979
P978
3
2
P84
FRIARGATE
P969
E
M3
M34
P982
P973
P971
UP DN
RAI
AUT
LWR
CLR
1
P976
AUT
P974
E
P972
M43
FAI
GRIMSBY DOCKS
PYEWIPE ROAD
GD20
M22
GRIMSBY
PY8R
R
PY8
GD19
N
F
PY13
R
PY13R
GD2
M32
TI OXIDE GF
GREAT COATES NO1 JN
MARSH JN SIDINGS
GD16
GD10
M29
DEPOT WALKWAY
AMBULANCE
R
IR11R
IR11
IR207
IE36
UP DN
IR85
IE9
R
IE9R
TEL
IR20
IR87
SHUNT SPUR
RCPTN SDGS
IR47
IMMINGHAM TMD
IR70
IR82
IE19
STORAGE SIDINGS
IR203
SIMON STORAGE
COAL EXPORT TERMINAL
HENDERSON QUAY
IW265
MINERAL QUAY SDGS
DEPARTURE WESTERN JETTY ARRIVAL
IW273
IMMINGHAM
IW263
HUMBERSIDE #1
DOWN LINE
INTERNATIONAL TERMINAL #2
IW261
WESTERN ENTRANCE
KILLINGHOLME BRANCH
IW253
IW267
IW277
IW258
IR206
IW251
IW250
IW262
UP DN
COAL PAD 2
IW249
IW252
IW264
LOS
IW273
IW266
COAL PAD 1
IMMINGHAM WEST JN
IW255
ORE LINE
M

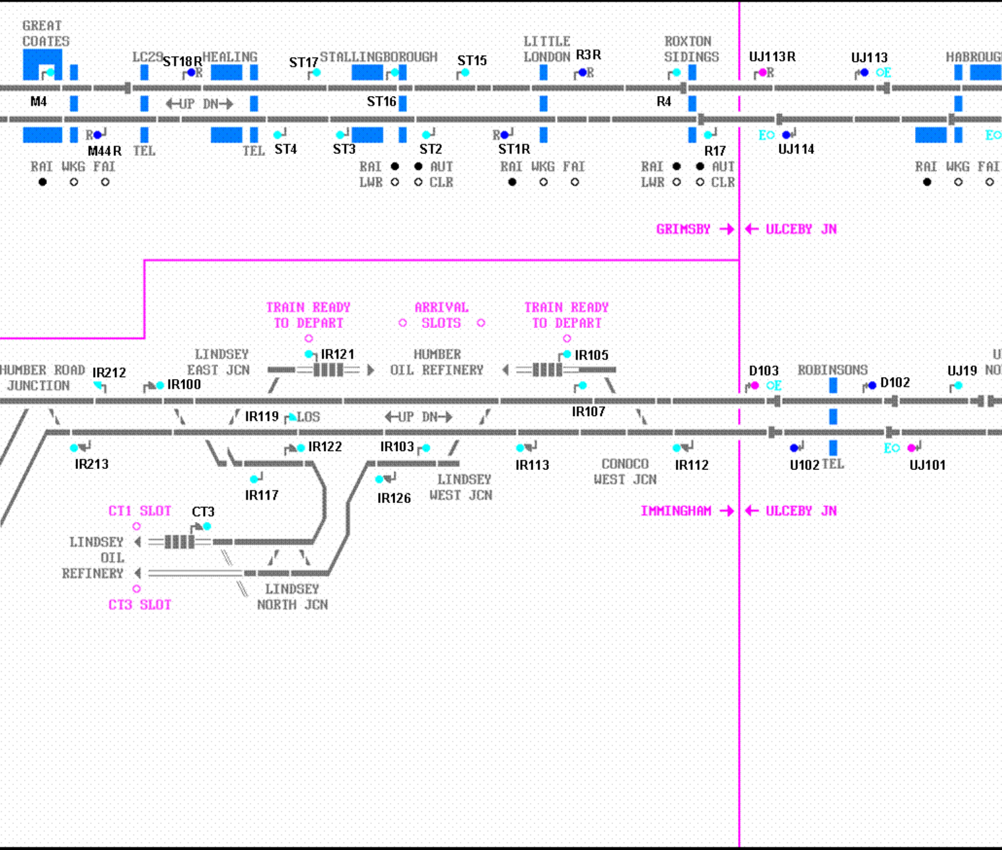
GREAT COATES
LC29
ST18R
R
HEALING
ST17
STALLINGBOROUGH
ST15
LITTLE LONDON
R3R
R
ROXTON SIDINGS
UJ113R
R
UJ113
E
M4
←UP DN→
ST16
R4
R
M44R
TEL
TEL
ST4
ST3
ST2
R
ST1R
R17
E
UJ114
E
RAI WKG FAI
● ○ ○
RAI ● ● AUT
LWR ○ ○ CLR
RAI WKG FAI
● ○ ○
RAI ● ● AUT
LWR ○ ○ CLR
RAI WKG FAI
● ○ ○
GRIMSBY →
← ULCEBY JN
TRAIN READY TO DEPART
○
ARRIVAL ○ SLOTS ○
TRAIN READY TO DEPART
○
IR121
IR105
LINDSEY EAST JCN
HUMBER OIL REFINERY
HUMBER ROAD JUNCTION
IR212
IR100
D103
E
ROBINSONS
D102
UJ19
IR119
LOS
←UP DN→
IR107
IR213
IR122
IR103
IR113
CONOCO WEST JCN
IR112
U102
TEL
E
UJ101
IR117
IR126
LINDSEY WEST JCN
IMMINGHAM →
← ULCEBY JN
CT1 SLOT
○
CT3
LINDSEY OIL REFINERY
○
CT3 SLOT
LINDSEY NORTH JCN

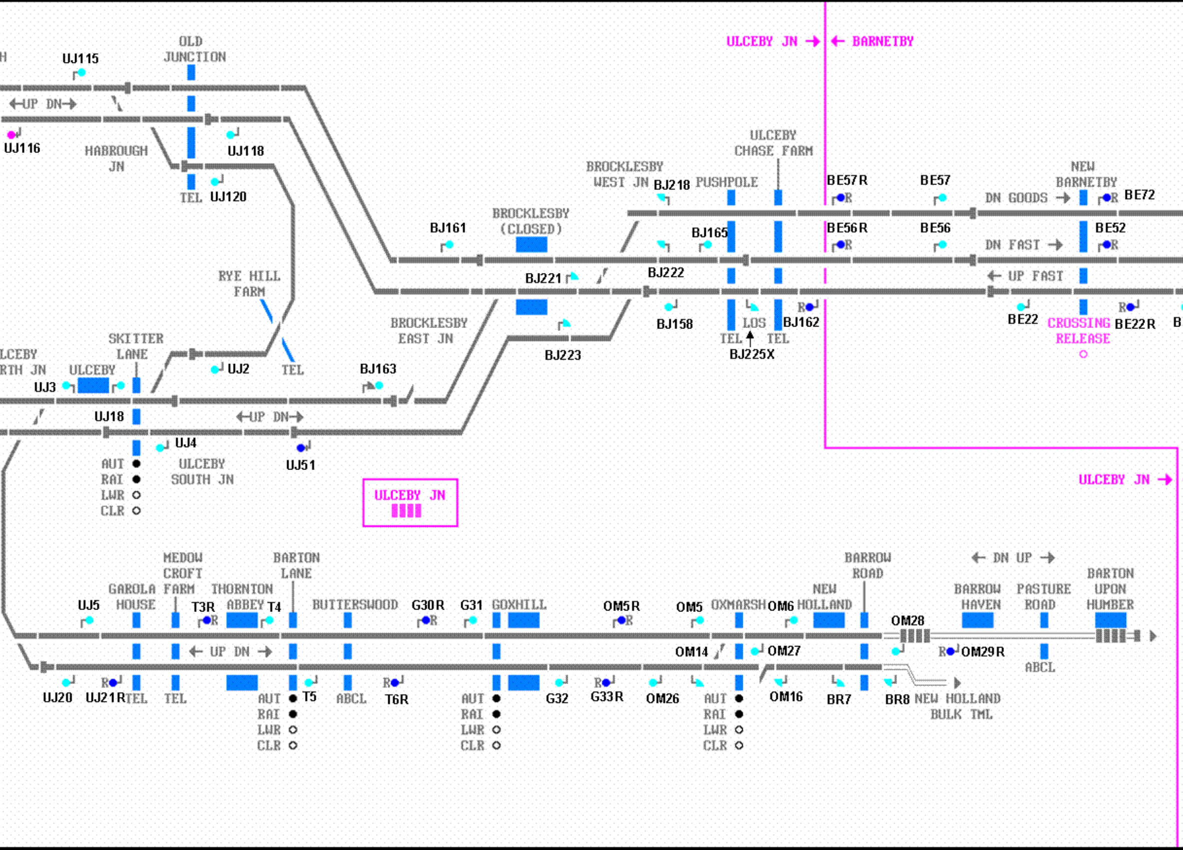
ULCEBY JN →
← BARNETBY
UJ115
OLD JUNCTION
←UP DN→
UJ116
HABROUGH JN
UJ118
TEL
UJ120
ULCEBY CHASE FARM
BROCKLESBY WEST JN
BJ218
PUSHPOLE
BE57R
BE57
NEW BARNETBY
DN GOODS →
BE72
BJ161
BROCKLESBY (CLOSED)
BJ165
BE56R
BE56
BE52
DN FAST →
← UP FAST
BJ221
BJ222
RYE HILL FARM
BJ158
LOS
BJ162
TEL
BJ225X
BE22
CROSSING RELEASE
BE22R
BROCKLESBY EAST JN
BJ223
SKITTER LANE
ULCEBY
UJ3
UJ2
TEL
BJ163
UJ18
←UP DN→
UJ4
UJ51
AUT
RAI
LWR
CLR
ULCEBY SOUTH JN
ULCEBY JN
ULCEBY JN →
MEDOW CROFT FARM
BARTON LANE
GAROLA HOUSE
THORNTON ABBEY
UJ5
T3R
T4
BUTTERSWOOD
G30R
G31
GOXHILL
OM5R
OM5
OXMARSH
OM6
NEW HOLLAND
BARROW ROAD
← DN UP →
BARROW HAVEN
PASTURE ROAD
BARTON UPON HUMBER
OM28
← UP DN →
OM14
OM27
OM29R
ABCL
UJ20
UJ21R
TEL
TEL
AUT
RAI
LWR
CLR
T5
ABCL
T6R
AUT
RAI
LWR
CLR
G32
G33R
OM26
AUT
RAI
LWR
CLR
OM16
BR7
BR8
NEW HOLLAND BULK TML

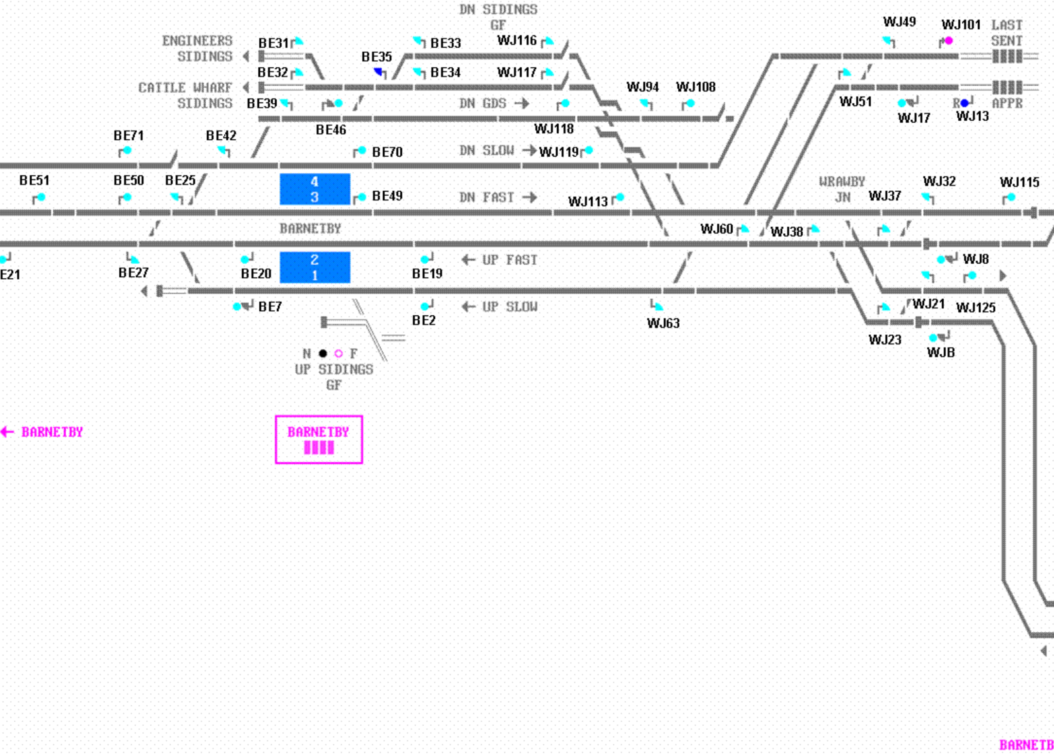
DN SIDINGS
GF
ENGINEERS
SIDINGS
CATTLE WHARF
SIDINGS
BE31
BE32
BE35
BE33
BE34
WJ116
WJ117
BE39
BE46
DN GDS
WJ94
WJ108
WJ49
WJ101
LAST
SENT
R
APPR
WJ51
WJ17
WJ13
WJ118
BE71
BE42
BE70
DN SLOW
WJ119
BE51
BE50
BE25
4
3
BE49
DN FAST
WJ113
WRAWBY
JN
WJ37
WJ32
WJ115
BARNETBY
WJ60
WJ38
E21
BE27
BE20
2
1
BE19
UP FAST
WJ8
BE7
BE2
UP SLOW
WJ63
WJ21
WJ125
WJ23
WJB
N ● ○ F
UP SIDINGS
GF
← BARNETBY
BARNETBY
BARNETB

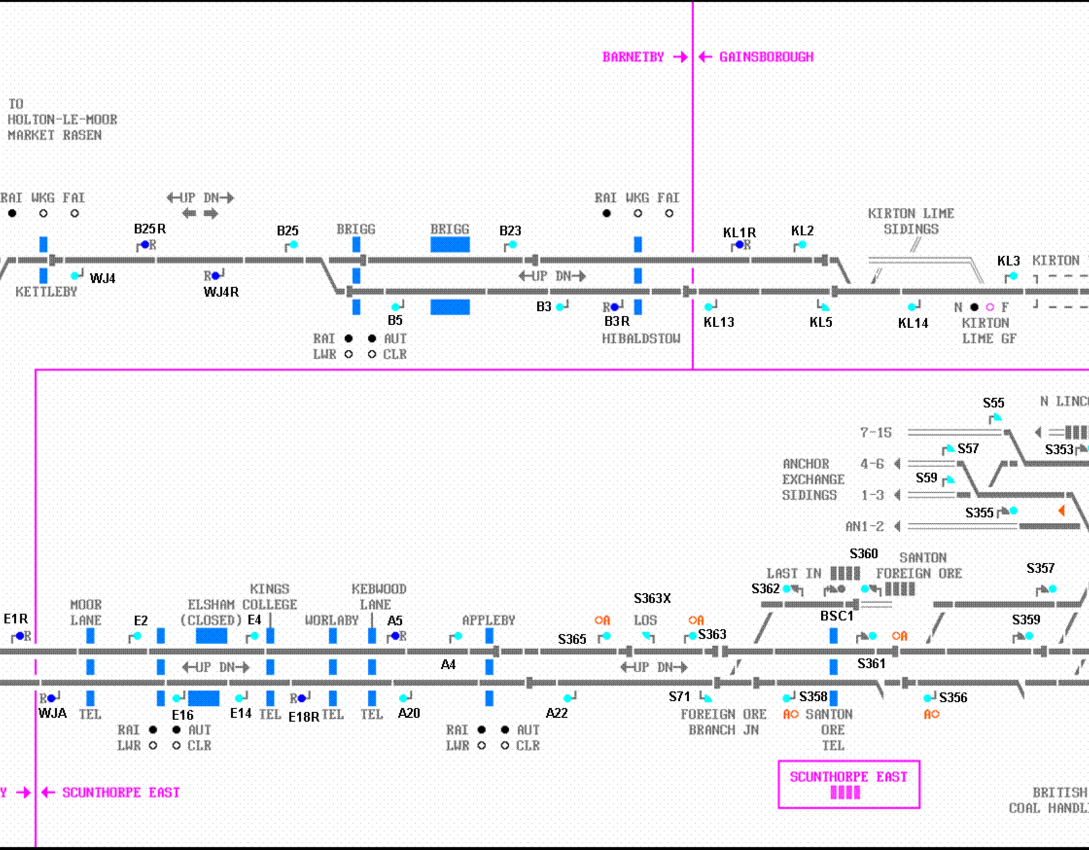
BARNETBY →
← GAINSBOROUGH
TO
HOLTON-LE-MOOR
MARKET RASEN
RAI WKG FAI
←UP DN→
B25R
B25
BRIGG
BRIGG
B23
RAI WKG FAI
KL1R
KL2
KIRTON LIME
SIDINGS
KL3
KIRTON
WJ4
KETTLEBY
R
WJ4R
←UP DN→
B5
B3
R
B3R
HIBALDSTOW
KL13
KL5
KL14
N F
KIRTON
LIME GF
RAI AUT
LWR CLR
S55
N LINC
7-15
S57
S353
ANCHOR
EXCHANGE
SIDINGS
4-6
S59
1-3
S355
AN1-2
S360
SANTON
FOREIGN ORE
LAST IN
S362
S357
E1R
MOOR
LANE
E2
ELSHAM
(CLOSED)
KINGS
COLLEGE
E4
WORLABY
KEBWOOD
LANE
A5
APPLEBY
S365
S363X
LOS
A
A
S363
BSC1
S359
A
←UP DN→
A4
←UP DN→
S361
R
WJA
TEL
E16
E14
TEL
R
E18R
TEL
TEL
A20
A22
S71
FOREIGN ORE
BRANCH JN
S358
A
SANTON
ORE
TEL
S356
A
RAI AUT
LWR CLR
RAI AUT
LWR CLR
Y →
← SCUNTHORPE EAST
SCUNTHORPE EAST
BRITISH
COAL HANDL

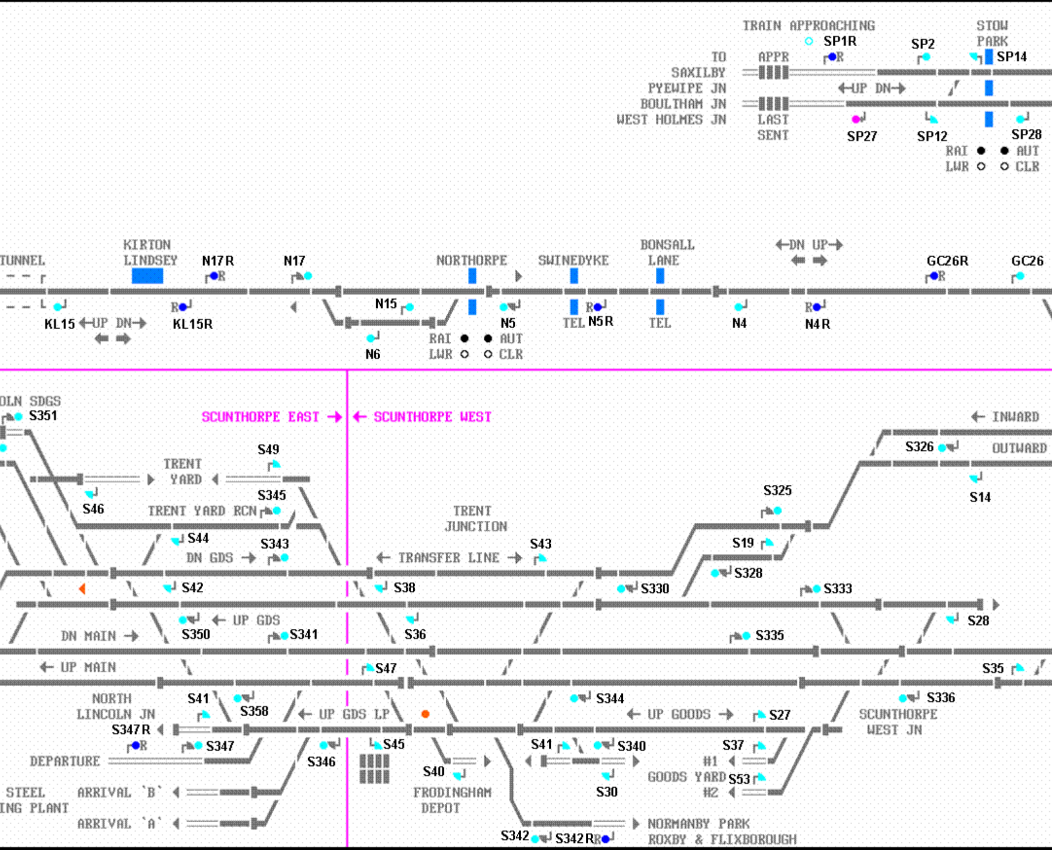
TRAIN APPROACHING
SP1R
SP2
STOW PARK
SP14
TO SAXILBY
PYEWIPE JN
BOULTHAM JN
WEST HOLMES JN
APPR
R
←UP DN→
LAST SENT
SP27
SP12
SP28
RAI ● ● AUT
LWR ○ ○ CLR
TUNNEL
KIRTON LINDSEY
N17R
N17
NORTHORPE
SWINEDYKE
BONSALL LANE
←DN UP→
GC26R
GC26
KL15
←UP DN→
KL15R
N15
N6
N5
TEL
N5R
TEL
N4
N4R
RAI ● ● AUT
LWR ○ ○ CLR
OLN SDGS
S351
SCUNTHORPE EAST →
← SCUNTHORPE WEST
← INWARD
OUTWARD
S326
S14
S49
TRENT YARD
S46
S345
TRENT YARD RCN
TRENT JUNCTION
S325
S44
S343
DN GDS →
← TRANSFER LINE →
S43
S19
S328
S42
S38
S330
S333
S350
← UP GDS
S341
S36
S335
S28
DN MAIN →
← UP MAIN
S47
S35
S41
S358
NORTH LINCOLN JN
← UP GDS LP
S344
← UP GOODS →
S27
S336
SCUNTHORPE WEST JN
S347R
R
S347
DEPARTURE
S346
S45
S41
S340
S37
#1
GOODS YARD
#2
S53
S40
S30
FRODINGHAM DEPOT
STEEL
ING PLANT
ARRIVAL `B`
ARRIVAL `A`
NORMANBY PARK
ROXBY & FLIXBOROUGH
S342
S342R
R

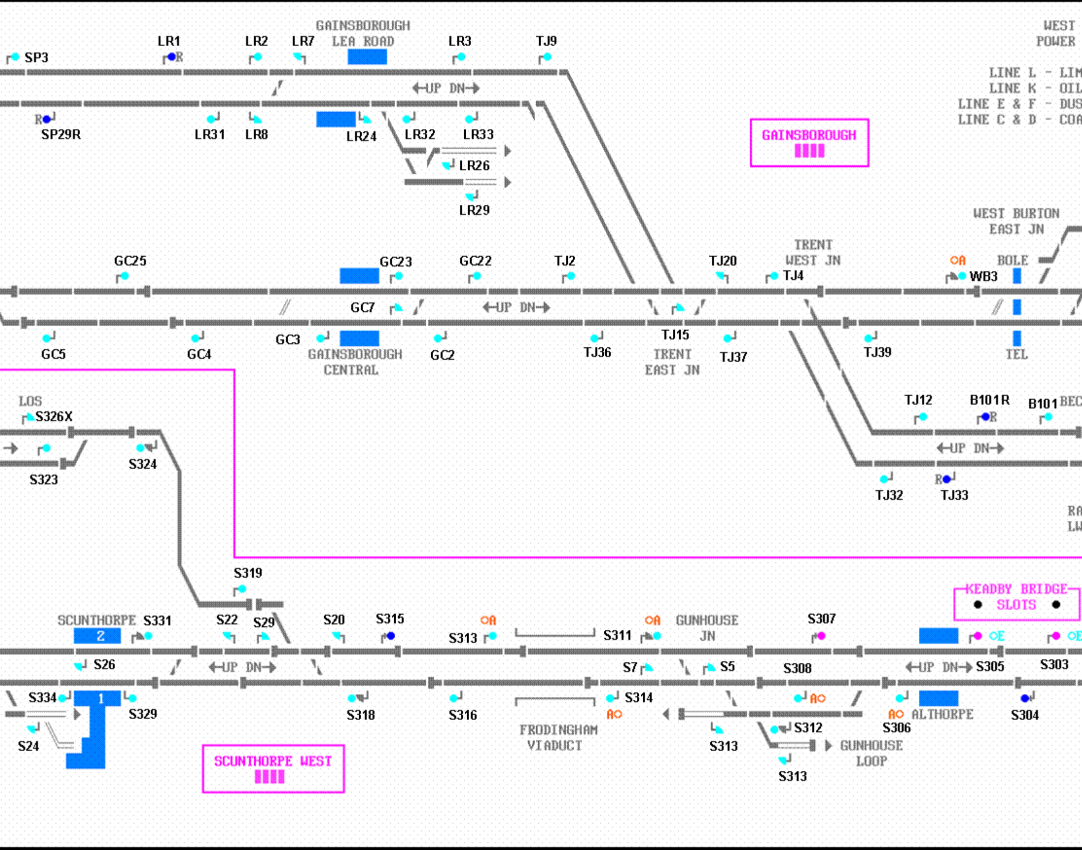
GAINSBOROUGH
LEA ROAD
WEST
POWER
SP3
LR1
R
LR2
LR7
LR3
TJ9
LINE L - LIM
LINE K - OIL
LINE E & F - DUS
LINE C & D - COA
←UP DN→
R
SP29R
LR31
LR8
LR24
LR32
LR33
GAINSBOROUGH
LR26
LR29
WEST BURTON
EAST JN
TRENT
WEST JN
GC25
GC23
GC22
TJ2
TJ20
TJ4
A
BOLE
WB3
GC7
←UP DN→
TJ15
GC3
GC5
GC4
GAINSBOROUGH
CENTRAL
GC2
TJ36
TRENT
EAST JN
TJ37
TJ39
TEL
LOS
S326X
S323
S324
TJ12
B101R
R
B101
BEC
←UP DN→
TJ32
R
TJ33
RA
LW
S319
SCUNTHORPE
S331
2
S22
S29
S20
S315
A
S313
S311
A
GUNHOUSE
JN
S307
KEADBY BRIDGE
SLOTS
E
E
S26
←UP DN→
S7
S5
S308
←UP DN→
S305
S303
S334
1
S329
S318
S316
S314
A
A
A
ALTHORPE
S304
S24
FRODINGHAM
VIADUCT
S313
S312
S306
GUNHOUSE
LOOP
S313
SCUNTHORPE WEST

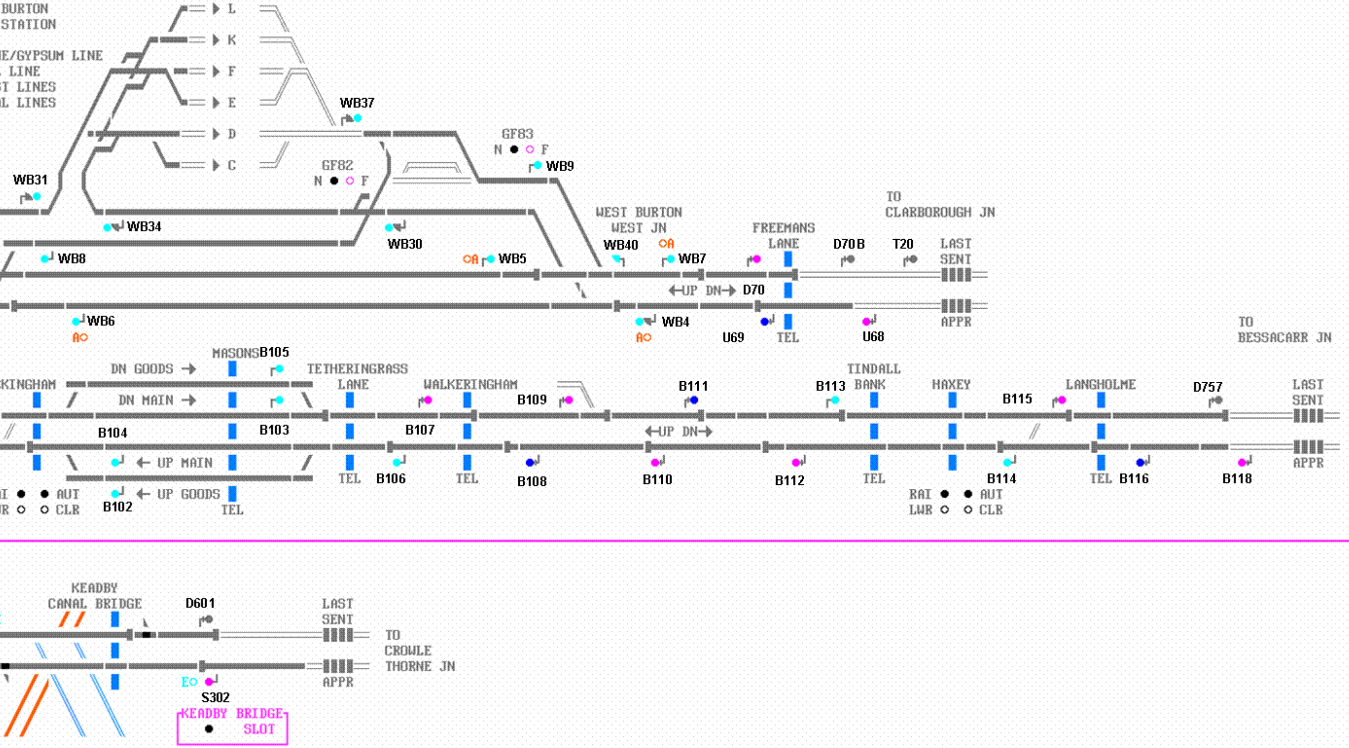
BURTON
STATION
E/GYPSUM LINE
LINE
T LINES
L LINES
L
K
F
E
D
C
WB37
GF83
N F
WB9
GF82
N F
WB31
WB34
WB30
WB8
WB5
A
WEST BURTON
WEST JN
WB40
A
WB7
FREEMANS
LANE
D70B
T20
TO
CLARBOROUGH JN
LAST
SENT
UP DN
D70
WB6
A
WB4
A
U69
TEL
U68
APPR
TO
BESSACARR JN
MASONS
B105
DN GOODS
TETHERINGRASS
LANE
WALKERINGHAM
TINDALL
BANK
HAXEY
LANGHOLME
D757
LAST
SENT
KINGHAM
DN MAIN
B103
B107
B109
B111
B113
B115
B104
UP DN
UP MAIN
TEL
B106
TEL
B108
B110
B112
TEL
B114
TEL
B116
B118
APPR
AUT
CLR
UP GOODS
TEL
B102
RAI
LWR
AUT
CLR
KEADBY
CANAL BRIDGE
D601
LAST
SENT
TO
CROWLE
THORNE JN
APPR
E
S302
KEADBY BRIDGE
SLOT