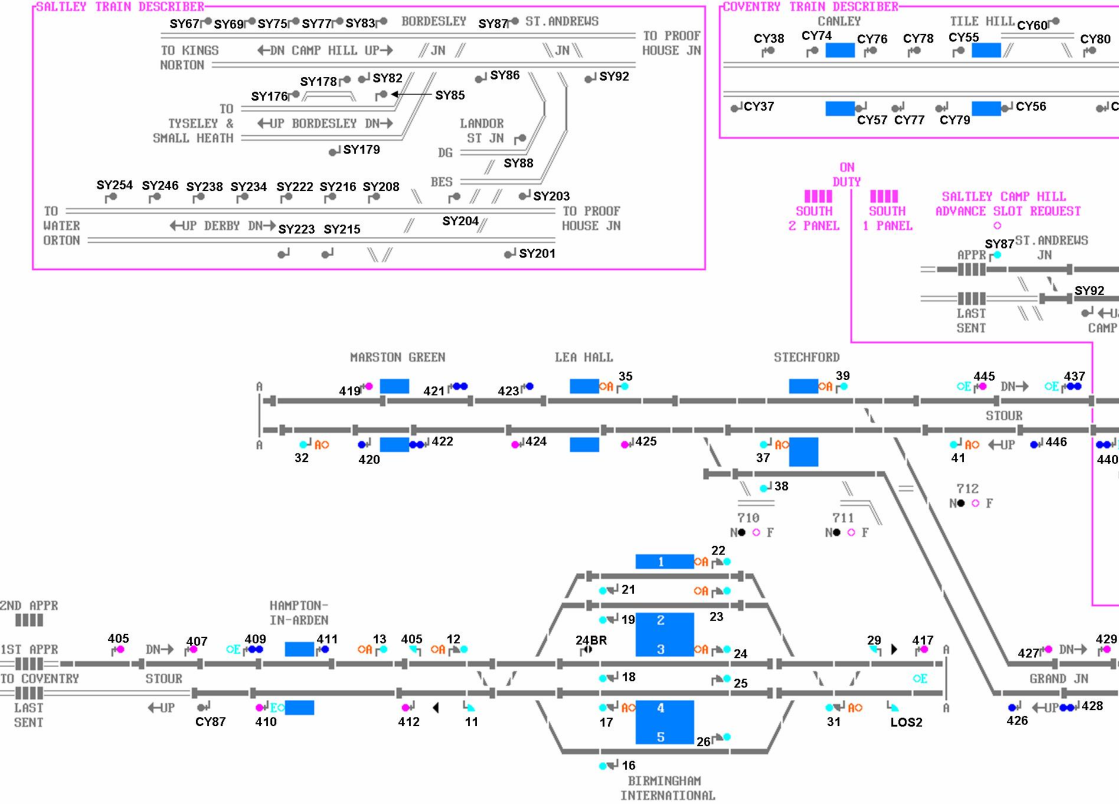
SALTLEY TRAIN DESCRIBER
SY67
SY69
SY75
SY77
SY83
BORDESLEY
SY87
ST.ANDREWS
TO PROOF HOUSE JN
TO KINGS NORTON
←DN CAMP HILL UP→
JN
JN
SY178
SY82
SY86
SY92
SY176
SY85
TO TYSELEY & SMALL HEATH
←UP BORDESLEY DN→
LANDOR ST JN
SY179
DG
SY88
BES
SY254
SY246
SY238
SY234
SY222
SY216
SY208
SY203
TO WATER ORTON
←UP DERBY DN→
SY223
SY215
SY204
TO PROOF HOUSE JN
SY201
COVENTRY TRAIN DESCRIBER
CANLEY
TILE HILL
CY60
CY38
CY74
CY76
CY78
CY55
CY80
CY37
CY57
CY77
CY79
CY56
ON DUTY
SOUTH 2 PANEL
SOUTH 1 PANEL
SALTLEY CAMP HILL ADVANCE SLOT REQUEST
SY87
ST.ANDREWS JN
APPR
SY92
LAST SENT
CAMP
MARSTON GREEN
LEA HALL
STECHFORD
419
421
423
35
39
445
DN→
437
A
A
32
420
422
424
425
37
41
←UP
446
440
STOUR
38
710
N F
711
N F
712
N F
1
22
21
23
2
19
3
24
2ND APPR
1ST APPR
405
DN→
407
409
HAMPTON-IN-ARDEN
411
13
405
12
24BR
29
417
A
427
DN→
429
TO COVENTRY
STOUR
18
25
GRAND JN
LAST SENT
←UP
CY87
410
412
11
17
4
31
LOS2
A
426
←UP
428
5
26
16
BIRMINGHAM INTERNATIONAL

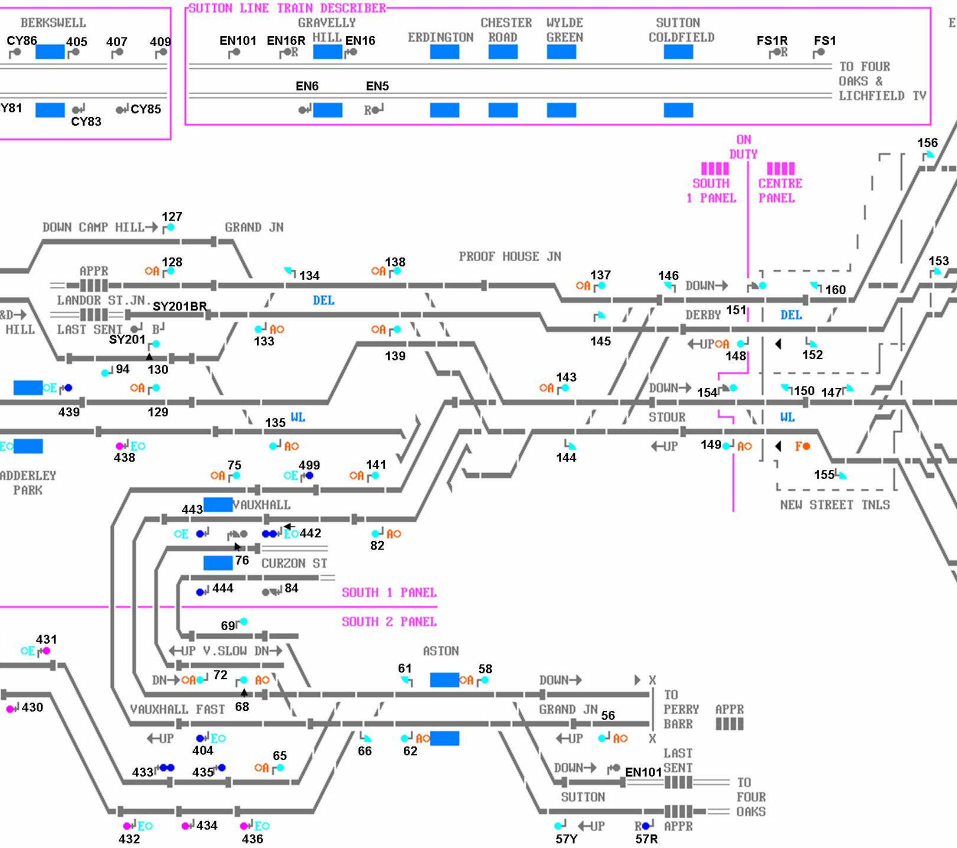
BERKSWELL
CY86
405
407
409
Y81
CY83
CY85
SUTTON LINE TRAIN DESCRIBER
EN101
EN16R
GRAVELLY HILL
EN16
ERDINGTON
CHESTER ROAD
WYLDE GREEN
SUTTON COLDFIELD
FS1R
FS1
EN6
EN5
TO FOUR OAKS & LICHFIELD TV
ON DUTY
SOUTH 1 PANEL
CENTRE PANEL
156
DOWN CAMP HILL→
127
GRAND JN
APPR
128
134
138
PROOF HOUSE JN
137
146
DOWN→
153
160
LANDOR ST.JN.
SY201BR
&D→
HILL
LAST SENT
B
SY201
133
DEL
139
145
DERBY
151
DEL
←UP
148
152
94
130
439
129
143
DOWN→
154
150
147
135
WL
STOUR
WL
438
144
←UP
149
F
155
ADDERLEY PARK
75
499
141
443
VAUXHALL
NEW STREET TNLS
442
82
76
CURZON ST
444
84
SOUTH 1 PANEL
SOUTH 2 PANEL
69
431
←UP V.SLOW DN→
ASTON
DN→
72
61
58
DOWN→
X
TO PERRY BARR
68
430
VAUXHALL FAST
GRAND JN
56
APPR
←UP
404
66
62
←UP
X
65
433
435
DOWN→
EN101
LAST SENT
TO FOUR OAKS
SUTTON
432
434
436
57Y
←UP
57R
APPR

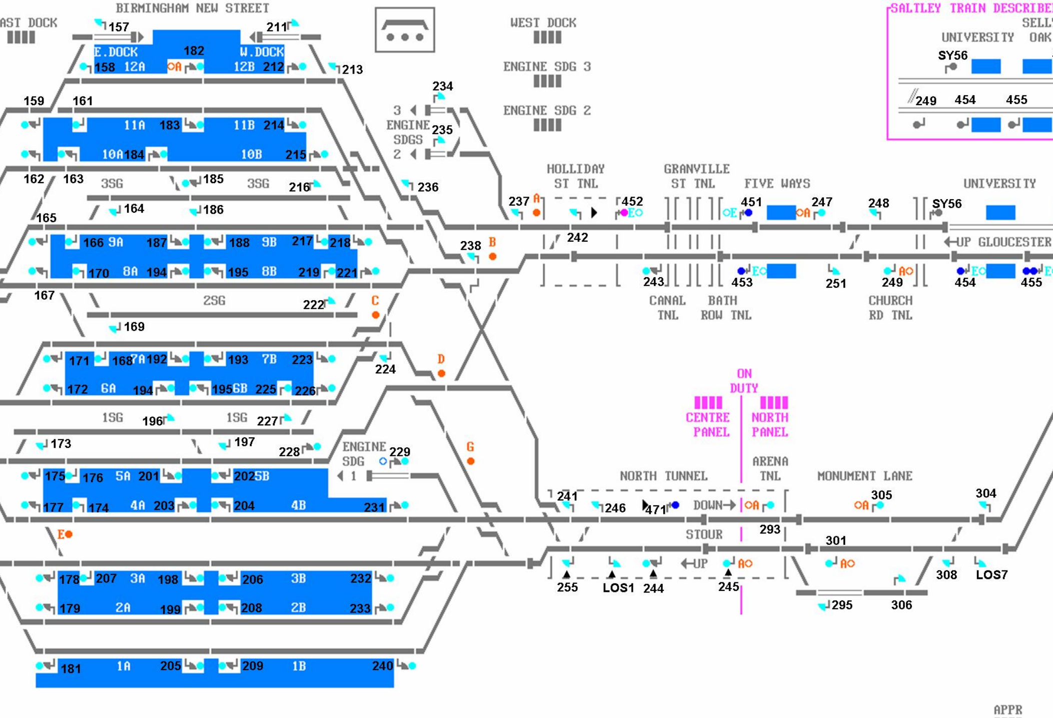
BIRMINGHAM NEW STREET
AST DOCK
157
211
E.DOCK
182
W.DOCK
158
12A
A
12B
212
213
WEST DOCK
ENGINE SDG 3
ENGINE SDG 2
234
3
ENGINE SDGS
235
2
159
161
11A
183
11B
214
10A
184
10B
215
162
163
3SG
185
3SG
216
236
164
186
165
166
9A
187
188
9B
217
218
170
8A
194
195
8B
219
221
167
2SG
222
C
169
171
168
7A
192
193
7B
223
224
D
172
6A
194
195
6B
225
226
1SG
196
1SG
227
173
197
228
ENGINE SDG
229
1
G
175
176
5A
201
202
5B
177
174
4A
203
204
4B
231
E
178
207
3A
198
206
3B
232
179
2A
199
208
2B
233
181
1A
205
209
1B
240
HOLLIDAY ST TNL
GRANVILLE ST TNL
FIVE WAYS
UNIVERSITY
237
A
452
E
451
E
A
247
248
SY56
242
238
B
UP GLOUCESTER
243
453
E
251
A
249
454
E
455
E
CANAL TNL
BATH ROW TNL
CHURCH RD TNL
SALTLEY TRAIN DESCRIBER
SELLY OAK
UNIVERSITY
SY56
249
454
455
ON DUTY
CENTRE PANEL
NORTH PANEL
ARENA TNL
NORTH TUNNEL
MONUMENT LANE
241
246
471
DOWN
A
293
A
305
304
STOUR
301
UP
A
A
255
LOS1
244
245
295
306
308
LOS7
APPR
TO ASTON

PLATFORM LOCKING
- ● STANDARD LOCKING
- ○ PLATFORM ARROWS

SIM ERA
- ● 1976-1991
- ○ 1992-2000
- ○ 2001 ONWARDS

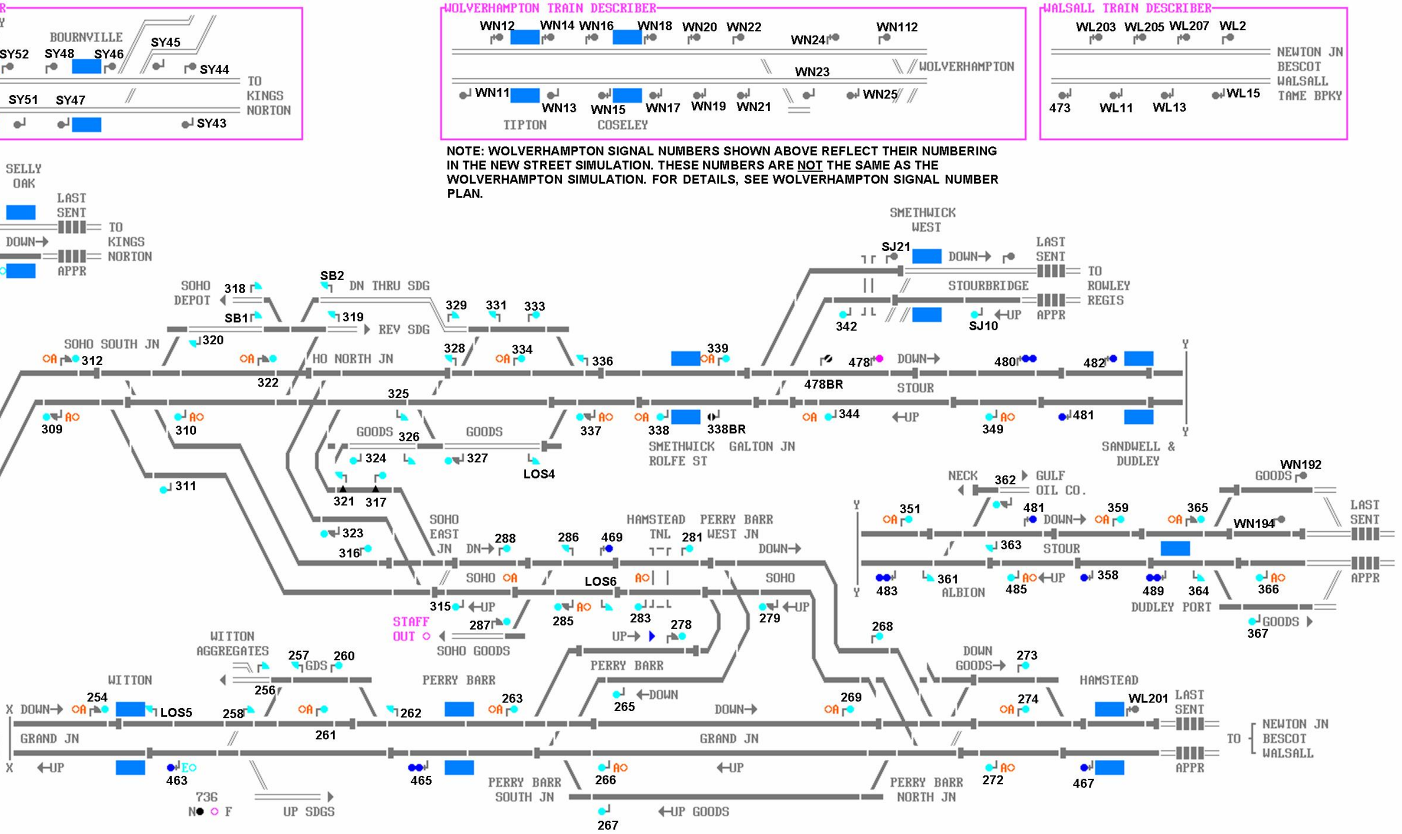
BOURNVILLE
SY52
SY48
SY46
SY45
SY44
SY51
SY47
SY43
TO KINGS NORTON
WOLVERHAMPTON TRAIN DESCRIBER
WN12
WN14
WN16
WN18
WN20
WN22
WN24
WN112
WN23
WOLVERHAMPTON
WN11
WN13
WN15
WN17
WN19
WN21
WN25
TIPTON
COSELEY
WALSALL TRAIN DESCRIBER
WL203
WL205
WL207
WL2
NEWTON JN
BESCOT
WALSALL
TAME BPKY
473
WL11
WL13
WL15
SELLY OAK
LAST SENT
DOWN→
TO KINGS NORTON
APPR
SOHO DEPOT
318
SB1
SB2
DN THRU SDG
319
REV SDG
320
329
331
333
SOHO SOUTH JN
312
HO NORTH JN
322
328
334
336
339
SMETHWICK WEST
SJ21
DOWN→
LAST SENT
TO ROWLEY REGIS
STOURBRIDGE
APPR
342
SJ10
←UP
478
478BR
DOWN→
STOUR
480
482
325
309
310
326
GOODS
GOODS
324
327
LOS4
337
338
338BR
344
←UP
349
481
SMETHWICK ROLFE ST
GALTON JN
SANDWELL & DUDLEY
311
321
317
323
316
SOHO EAST JN
DN→
288
286
469
HAMSTEAD TNL
PERRY BARR WEST JN
281
DOWN→
SOHO
SOHO
LOS6
315
←UP
287
285
283
278
UP→
279
←UP
STAFF OUT
SOHO GOODS
NECK
362
GULF OIL CO.
WN192
GOODS
351
481
DOWN→
359
365
WN194
LAST SENT
STOUR
363
483
361
ALBION
485
←UP
358
489
364
366
APPR
DUDLEY PORT
367
GOODS
268
WITTON AGGREGATES
257
GDS
260
256
WITTON
PERRY BARR
PERRY BARR
263
DOWN GOODS→
273
HAMSTEAD
254
LOS5
258
262
265
←DOWN
269
274
WL201
LAST SENT
X DOWN→
261
DOWN→
GRAND JN
GRAND JN
TO
NEWTON JN
BESCOT
WALSALL
X ←UP
463
465
266
←UP
272
467
APPR
736
N
F
UP SDGS
PERRY BARR SOUTH JN
PERRY BARR NORTH JN
267
←UP GOODS
Y
Y
Y
Y

NOTE: WOLVERHAMPTON SIGNAL NUMBERS SHOWN ABOVE REFLECT THEIR NUMBERING IN THE NEW STREET SIMULATION. THESE NUMBERS ARE NOT THE SAME AS THE WOLVERHAMPTON SIMULATION. FOR DETAILS, SEE WOLVERHAMPTON SIGNAL NUMBER PLAN.